amateur radio

Vol. 36, No. 11
NOVEMBER 1968

Registered at G.P.O., Melbourne, for transmission by post as a periodical

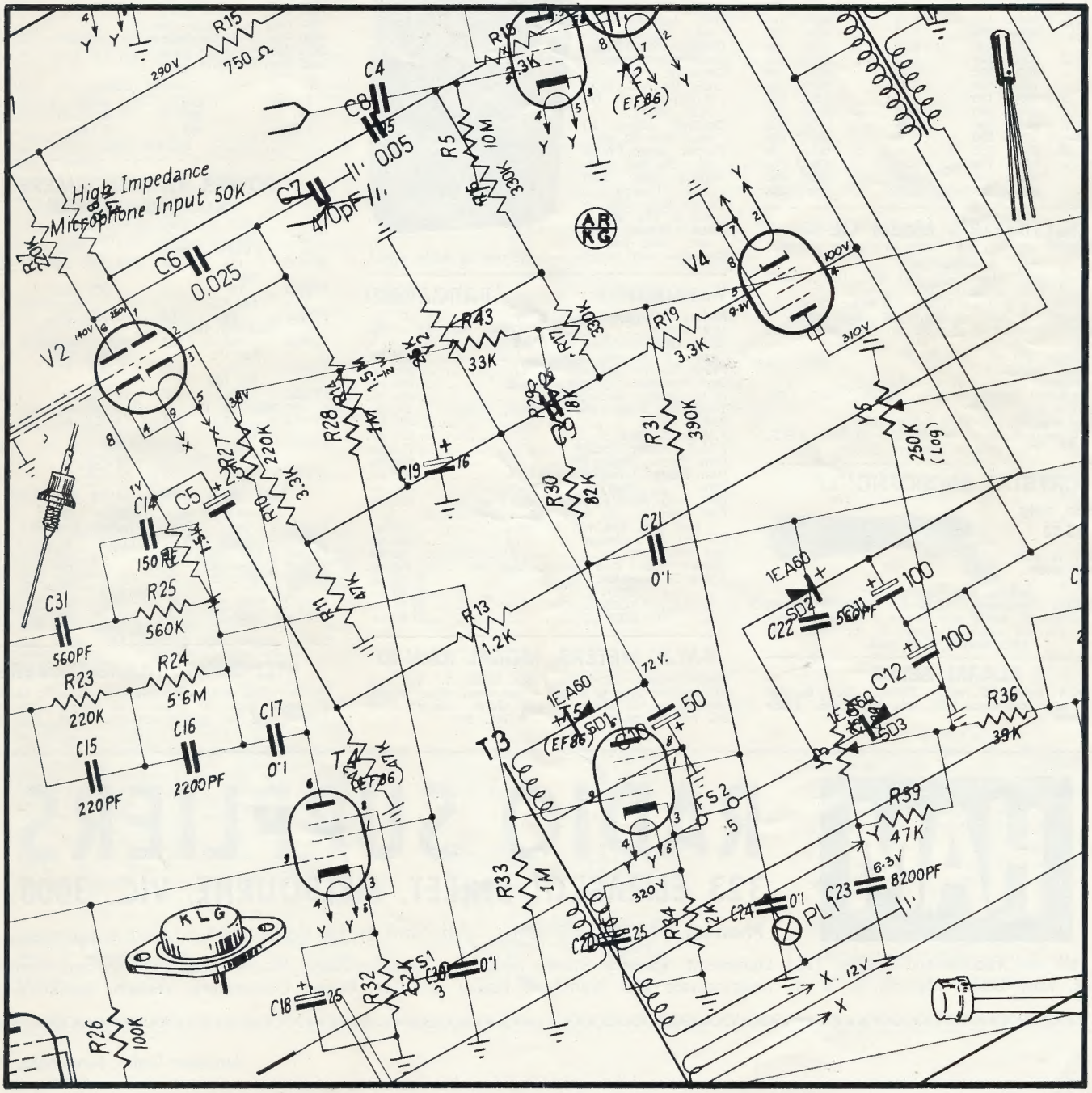

FIXED CONDENSERS

125 Volt Rating:

10, 15, 18, 22, 27, 33, 39, 47, 56, 68, 82, 100, 120, 150, 220, 270, 330, 390, 425, 470, 560 pF. **all 13c ea.**

0.01	uF.	160v.	12c	0.0018	uF.	600v.	18c
0.01	,,	600v	25c	0.0022	,,	400v.	12c
0.012	,,	125v	13c	0.0022	,,	600v.	18c
0.012	,,	400v	12c	0.0027	,,	400v.	17c
0.012	,,	600v.	19c	0.0027	,,	600v.	18c
0.015	,,	125v.	13c	0.0033	,,	400v.	12c
0.015	,,	600v.	19c	0.0033	,,	600v.	14c
0.018	,,	600v.	22c	0.0039	,,	400v.	12c
0.022	,,	125v.	13c	0.0039	,,	600v.	18c
0.022	,,	400v.	14c	0.0047	,,	400v.	15c
0.022	,,	600v.	24c	0.0047	,,	600v.	22c
0.027	,,	160v.	14c	0.0056	,,	400v.	15c
0.027	,,	400v.	15c	0.0056	,,	600v.	15c
0.027	,,	600v.	22c	0.0068	,,	400v.	15c
0.033	,,	125v.	14c	0.0068	,,	600v.	15c
0.033	,,	400v.	15c	0.1	,,	125v.	15c
0.033	,,	600v.	22c	0.1	,,	400v.	18c
0.039	,,	125v.	14c	0.1	,,	600v.	27c
0.039	,,	400v.	14c	0.2	,,	400v.	20c
0.039	,,	600v.	28c	0.5	,,	400v.	20c
0.047	,,	125v.	14c	0.12	,,	125v.	25c
0.047	,,	400v.	14c	0.12	,,	600v.	20c
0.047	,,	600v.	14c	0.15	,,	125v.	15c
0.056	,,	125v.	14c	0.15	,,	400v.	15c
0.056	,,	400v.	14c	0.15	,,	600v.	20c
0.056	,,	600v.	18c	0.18	,,	125v.	17c
0.068	,,	125v.	13c	0.18	,,	400v.	17c
0.068	,,	400v.	14c	0.22	,,	125v.	15c
0.068	,,	600v.	18c	0.22	,,	400v.	22c
0.082	,,	125v.	20c	0.22	,,	600v.	24c
0.082	,,	400v.	22c	0.27	,,	125v.	22c
0.082	,,	600v.	28c	0.27	,,	400v.	25c
0.001	,,	125v.	15c	0.27	,,	600v.	28c
0.001	,,	400v.	15c	0.33	,,	125v.	25c
0.001	,,	600v.	18c	0.33	,,	400v.	28c
0.001	,,	5Kv.	45c	0.39	,,	160v.	22c
0.001	Feed	Thru	29c	0.39	,,	400v.	40c
0.0012	uF.	400v.	15c	0.47	,,	125v.	28v
0.0012	,,	600v.	15c	0.47	,,	400v.	35c
0.0015	,,	200v.	15c	0.47	,,	600v.	40c
0.0015	,,	600v.	15c	0.68	,,	125v.	35c

MULTIMETER, Model OL-64

20,000 ohms per volt d.c., 8,000 ohms per volt a.c.

Specifications:

D.C. volts: 0-0.3, 1, 10, 50, 250, 500, 1,000, 5,000.
A.C. volts: 0-10, 50, 250, 1,000.
D.C. current: 0-30 uA.; 1, 50, 500 mA.; 10 A.
Resistance: 0-5, 500K ohms; 5, 50 megohms.
Decibels: Minus 20 to plus 22 db., plus 20 to plus 36 db.
Capacitance: 250 pF. to 0.02 uF.
Inductance: 0-5000 H.
Load current: 0-0.06, 0.6, 60 mA.
Self contained batteries: 22.5v. (BL-015) x 1, 1.5v. (UM3) x 2.
Size and weight: 6 x 4-1/5 x 2 in. 650 g.
Meter movement fund. sensitivity: 30 uA., F.S.D.
Price $19.75, postage 25c.

CRYSTAL MICROPHONES

Price only $5.50

Stand to suit $2.50 extra.

Packing and Postage 25c.

Model BM3 (illustrated): Response 100-8,000 cycles, fitted with 6 ft. cable and phone plug with on-off switch. Can be used on stand or for hand use.
BM3 Insert, $1.00 each

ALARM BELLS

(Parachute type), 6 volt. Suitable for Burglar Alarms, etc., complete with trip rope, etc. **Price $1.25**, post 50c.

SCOOP PURCHASE!

½W. AND 1W. RESISTORS

Cracked Carbon 5%. Preferred Range:

10, 15, 18, 22, 27, 33, 39, 47, 56, 68, 82, 100, 120, 150, 180, 220, 270, 330, 390, 470, 560, 680, 820, 1K, 1.2K, 1.5K, 1.8K, 2.2K, 2.7K, 3.3K, 3.9K, 4.7K, 5.6K, 6.8K, 8.2K, 10K, 12K, 15K, 18K, 22K, 27K, 33K, 39K, 47K, 56K, 68K, 82K, 100K, 120K, 150K, 180K, 220K, 270K, 330K, 390K, 470K, 560K, 680K, 820K, 1M, 2.2M, 3.3M, 3.9M, 4.7M, 5.6M, 6.8M, 8.2M, 10M.

½ watt: **8c** ea. or **$6.00** per 100
1 watt: **10c** ea. or **$7.00** per 100

When ordering 100 or over, minimum quantity of 10 of each selected type.

STEREO HEADPHONES

Large rubber earpiece, full audible frequency, 50-1500 cycles. **Price $9.00.**

MULTIMETER, Model 200H

20,000 ohms per volt d.c., 10,000 ohms per volt a.c.

Specifications:
D.C. volts: 0-5, 25, 50, 250, 500, 2500.
A.C. volts: 0-10, 50, 100, 500, 1000.
D.C. current: 0-50 uA.; 25, 250 mA.
Resistance: 0-60,000 ohms; 0-6 meg.
Capacity: 0.01 - 0.3 uF. (at A.C. 5v.); 0.0001-0.01 uF. (at A.C. 250v.).
Decibel: Minus 20 db., plus 22 db.
Output range: 0-10, 50, 100, 500, 1000.
Battery used: UM3 1.5v., 1-piece.
Dimensions: 3¼ x 4½ x 1⅛ inch.
Price $11.25, inc. tax. Post free.

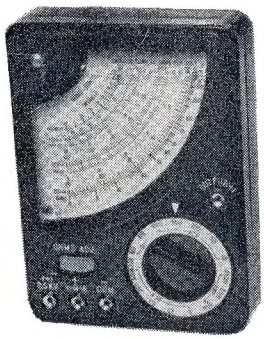

Complete with internal battery, testing leads, prods.

BARGAINS!! BARGAINS!!

Philips Trimmers .... 10-60 pF. 32c; 3-30 pF. 23c
NE2 Neons 90v. 30c; 240v. 50c
Bezal Lamp Holders and Globe, red/white 45c ea.
Banana Plugs and Sockets .... 12c ea.
FT243 Crystal Sockets .... 29c ea.
Don Miniature Crystal Sockets .... 29c ea.
HC18 Crystal Sockets .... 40c ea.
Transistor Plugs and Sockets, 3.3m. .... 35c pr.
P.M.G. Plugs .... 40c ea.
P.M.G. Sockets .... 35c ea.
P.M.G. Joiner Socket .... 75c ea.
Dim Plugs, Single Pin .... 25c ea.
Dim Plugs, Three Pin .... 45c ea.
Dim Plugs, Five Pin .... 45c ea.
Dim Plug Joiners, Three and Five Pin .... 45c ea.
Coil Formers, 1¼ inch diam., available in four and five pin bases .... 35c ea.
2.5 mH. R.F. Chokes .... 48c ea.
Egg Insulators .... 8c ea.
Speaker Plugs and Socket, four pin .... 18c ea.
Ageis Coils, ST45C .... $1.50 ea.
,, ,, M26A .... $2.50 ea.
,, ,, SO515 .... $1.50 ea.
,, ,, S203 .... $1.50 ea.

S.W.R. METERS, MODEL KSW-10

Specifications.—Standing Wave Ratio: 1:1 to 1:10. Accuracies: Plus or minus 3 per cent. scale length. Impedance: 52 ohms and 75 ohms. Meter: 0-100 DC microamperes. **Price $19** inc. tax.

SPECIAL! BARGAIN PRICED!

RECORDING TAPES

Well known make, fully guaranteed, sealed cartons

3 INCH SPOOLS

150 Feet — Acetate Base **55c**
225 Feet — Acetate Base **75c**
300 Feet — Mylar Base **$1.15**

3¼ INCH REELS

600 Feet — Mylar Base **$1.85**

4 INCH REELS

400 Feet — Acetate Base **$1.40**

5 INCH REELS

600 Feet — Acetate Base **$1.85**
900 Feet — Acetate Base **$2.30**
900 Feet — Mylar Base **$3.00**
1200 Feet — Mylar Base **$3.80**
1800 Feet — Mylar Base **$5.75**

5¾ INCH REELS

900 Feet — Acetate Base **$2.45**
1200 Feet — Acetate Base **$3.40**
1200 Feet — Mylar Base **$3.75**
1800 Feet — Tensilised Mylar Base **$4.75**

7 INCH REELS

1200 Feet — Acetate Base **$3.00**
1200 Feet — Mylar Base **$3.75**
1800 Feet — Acetate Base **$4.50**
1800 Feet — Mylar Base **$5.00**
2400 Feet — Mylar Base **$6.25**
3600 Feet — Mylar Base **$9.75**

EMPTY REELS

3 inch .... **25c** 5 inch **40c**
3¼ inch .... **35c** 5¾ inch **55c**
4 inch .... **40c** 7 inch **50c**

Postage 20c.

POWER TRANSFORMERS

VOLTAGE DOUBLER TYPES

Type No.	H.T. Sec. Volts	Max. D.C. mA.	Heater Windings V.	A.	Price
PT2062	115 tap 105	80	6.3CT	2.25	**$10.80**
PT2063	135 tap 125	80	6.3CT	2.25	**$13.40**
PT2067	120 taps 110, 100	100	6.3CT	4	**$13.00**
PT2064	135 tap 125	125	6.3 6.3CT	2.25 2.25	**$12.30**
PT2065	115 tap 105	150	6.3CT	6	**$13.60**
PT5324	124 taps 114, 104	150	6.3CT 6.3CT	3 3	**$12.20**
PT2066	125 tap 105	190	6.3CT	6	**$13.70**
PT2068	195 taps 185, 175	200	6.3 6.3CT	4 3	**$23.00**
PT1965	115	300	12.6CT	5	**$29.00**

FULL WAVE TYPES—VALVE RECTIFIER

Type No.	H.T. Sec. Volts	Max. D.C. mA.	Rectifier Heater V.	A.	Other Heaters V.	A.	Price
PT1992	150-0-150	30			6.3	1.7	**$5.00**
PT1951	180-0-180	40			6.3	2	**$6.70**
PT1940	285-0-285	40	6.3 tap 5	2 2	6.3	2	**$8.50**
PT1993	225-0-225	50			6.3	2	**$5.70**
PT1941	285-0-285	60	6.3 tap 5	2 2	6.3 CT	2	**$9.00**

STEP-DOWN TRANSFORMERS

Primary: 240 volts. Secondary (switched): 24, 28 or 32 volts a.c., 50 cycle, 1.88 amp., with on/off switch and two outlet sockets. **$7.00**, post $1.00.

HAM RADIO SUPPLIERS

323 ELIZABETH STREET, MELBOURNE, VIC., 3000

Phones: 67-7329, 67-4286 All Mail to be addressed to above address

We sell and recommend Leader Test Equipment, Pioneer Stereo Equipment and Speakers, Hitachi Radio Valves and Transistor Radios, Kew Brand Meters, A. & R. Transformers and Transistor Power Supplies, Ducon Condensers, Welwyn Resistors, etc.

amateur radio

JOURNAL OF THE WIRELESS INSTITUTE OF AUSTRALIA FOUNDED 1910

NOVEMBER 1968
Vol. 36, No. 11

Editor:
K. E. PINCOTT VK3AFJ

Assistant Editor:
E. C. Manifold VK3EM

Publications Committee:
G. W. Baty (Secretary) VK3AOM
A. W. Chandler (Circulation) VK3LC
Ken Gillespie VK3GK

Draughtsmen:—
Clem Allan VK3ZIV
Peter Ramsay VK3ZWN
Ian Smith .... 36 Green St., Noble Park

Advertising Enquiries:
C/o. P.O. Box 36, East Melbourne, Vic., 3002.
or
Mrs. BELLAIRS, Phone 41-3535, 478 Victoria Parade, East Melbourne, Vic., 3002. Hours: 10 a.m. to 3 p.m. only.

Advertising copy (except Hamads) should be forwarded direct to the printers by **first of each month.**

Publishers:
VICTORIAN DIVISION W.I.A.
Reg. Office: 478 Victoria Parade, East Melbourne, Vic., 3002.

Printers:
"RICHMOND CHRONICLE," Phone 42-2419.
Shakespeare Street, Richmond, Vic., 3121.

★

All matters pertaining to "A.R.," other than subscriptions, should be addressed to:

THE EDITOR,
"AMATEUR RADIO,"
P.O. BOX 36,
EAST MELBOURNE, VIC., 3002.

Acknowledgments will be sent following the Committee meeting on the second Monday of each month. All Sub-Editors should forward their articles to reach "A.R." **before the 5th of each month.** Any item received after the Committee meeting will be held over until the next month. Publication of any item is dependent upon space availability, but in general about two months may elapse before a technical article is published after consideration by the Publications Committee.

★

Members of the W.I.A. should refer all enquiries regarding delivery of "A.R." direct to their Divisional Secretary and not to "A.R." direct. Non-members of the W.I.A. should write to the Victorian Division, C/o. P.O. Box 36, East Melbourne. Two months' notice is required before a change of mailing address can be effected. Readers should note that any change in the address of their transmitting station must, by P.M.G. regulation, be notified to the P.M.G. in the State of residence; in addition, "A.R." should also be notified. A convenient form is provided in the "Call Book".

★

Direct subscription rate is $3.60 a year, post paid, in advance. Single copies 30c. Issued monthly on first of the month. February edition excepted.

CONTENTS

Page

Technical Articles:—

Errata 11
Hints and Kinks: Transceiver Relays 20
Project—Solid State Transceiver, Part 1 13
S.S.B. Transmitter—An Amateur Engineering Project, Part 2 6

W.I.A. Federal Executive:—

Directors of I.A.R.U. Region 3 Division 5
Federal Comment 4
Repeater Technical Group Meeting 17

General:—

Book Review:
Mullard Semiconductor Interchangeability List 20
Notes on Solar Flare Warnings for Supersonic Transport Aircraft 20
Bulawayo 75th Anniversary Award 19
DX 19
Federal Awards 21
Federal QSL Bureau 21
Magazine Review: "Break In," June, July, August 16
Novel Mains Tester 20
Prediction Charts for November 1968 12
Provisional Sunspot Numbers 18
Publications Committee Report 21
VHF 18
W.I.A. D.X.C.C. 11
W.I.A. V.H.F.C.C. 18
160 Mx Transpacific Tests 18

Contests:—

Contest Calendar 21
Remembrance Day Contest Results—Tasmania Wins R.D. .. 10

W.I.A. OFFICIAL BROADCASTS

NEW SOUTH WALES

VK2WI, Sundays, at 1100 hours E.A.S.T.

3595 Kc. a.m.	145.130 Mc. a.m.
7146 Kc. a.m.	146.000 Mc. f.m.
53.866 Mc. a.m.	(53.950 Mc. f.m. proposed shortly)

VICTORIA

VK3WI, Sundays, at 1030 hours E.A.S.T.

1825 Kc. a.m.	144.500 Mc. a.m.
3600 Kc. s.s.b.	145.854 Mc. f.m.
7146 Kc. a.m.	432.500 Mc. a.m.
53.032 Mc. a.m.	

QUEENSLAND

VK4WI, Sundays, at 0900 hours E.A.S.T.

3580 Kc.	53.995 Mc.
7146 Kc.	144.36 Mc.
14.342 Mc.	

SOUTH AUSTRALIA

VK5WI, Sundays, at 0900 hours C.A.S.T. 3625, 7146, 14195 Kc. Also selected frequencies in 52 and 144 Mc. bands.

WESTERN AUSTRALIA

VK6WI, Sundays, at 0930 hours W.A.S.T.

3.655 Mc. s.s.b.	52.656 Mc. F3
7.080 Mc. a.m.	52.4 Mc. a.m.
14.100 Mc. s.s.b.	144.36 Mc. a.m.

TASMANIA

VK7WI, Sundays, at 1000 hours E.A.S.T. 3672 Kc., and re-transmitted by representative stations on—

7146 Kc.	144.1 Mc.
53.032 Mc.	432.6 Mc.

SIDEBAND ELECTRONICS ENGINEERING

In my last month's (October) advertisement I have included a plug for the ACITRON line of locally constructed equipment. My intention was to show my interest in all promising developments, naturally with also a little commercial consideration included.

A very ambitious programme and it will take time to realise. As soon as more news on the ACITRON line is available you can expect to hear more from me.

Meanwhile I continue to look for diversification, adding more YAESU-MUSEN gear to my stock. This stock will soon include half a dozen different brands, some 15 or more s.s.b. sets and over 25,000 dollars worth of gear! Yes, a long way from a modest start five years ago.

Mobile activity will soon increase and I am ready for it with the WEBSTER Bandspanners and Mark helical whips, the latter are 6 ft. long radiators for 40 metres and a genuine 10-15-20 metre triband one, no retuning or adjustments required. Also the matter of d.c. supplies will soon be solved with a reasonably priced Australian made unit, adaptable to Drakes, Swans and Galaxies. Target cost price no more than $100.

For home use I still recommend the MOSLEY and HQ-GAIN Junior and the HY-GAIN Master triband 10-15-20 m. Yagis. Next best is the all-band trapped NEWTRONICS Hustler vertical 4-BTV, which needs no guy ropes under average wind exposure. The German W-3-DZZ all-band dipole has become so popular that I had to rush a follow-up order to DL-land, but they will soon be in stock again.

Well, hereunder is my expanding list of goodies. For those who don't know me, yet, I sell brand-new imported gear for less than anybody else in Australia, all equipment is fully guaranteed and where necessary checked and tested before shipment. Prices are net, cash, Springwood, N.S.W. As to trade-ins, sorry no a.m. gear or antiquated receivers or disposal items. My very limited profit margin of 10 to 15 per cent. gross does not allow me to be generous on trade ins. 73, Arie Bles.

Latest GALAXY V. Mark III. Transceiver, the smallest powerhouse, $550.

GALAXY V. Mark II., one unit left, $475.

SWAN SW350C, SW500C, SW250 Transceivers, VOX units, ask for the latest literature and special prices.

YAESU-MUSEN FLDX-400/FRDX-400 Transmitter-Receiver combination, $750. FTDX-400 Transceiver, FTDX-100 Transceiver, now $575 and $550 resp. FLDX-2000 Linears and FT-50 Transceivers, to come, priced as competitively as the other Yaesu-Musen units!

Grab my last GONSET 2 metre Sidewinder to be ready for the summer 2 metre DX, $350, including 115v. a.c. supply. Likewise be ready for the 6 metre DX this season with the Swan SW250.

HEATH HA-15 Linears, a few kits left, no more imports after that, $150.

HY-GAIN TH6DXX, six element 10-15-20 metre beam, with BN-86 Balun, still only $200.

HY-GAIN TH3JR triband beam, $105.

MOSLEY TA33JR, $98.

HAM-M CDR heavy duty Rotator, with 230v. indicator-control unit, $180.

CDR AR-22 light Rotator, for junior beams, with control-indicator box, $60.

NEWTRONICS Hustler 4-BTV, 10-40 mx vertical, $55. With 80 mx top coil, $65.

WEBSTER Bandspanner, 10-80 mx centre-loaded Mobile Whip with mountings and spring, still only $55.

MARK 10-15-20 mx triband Helical Whip, sorry a bit dearer now, $27.50; Mark 40 mx 6 ft. Helical Whip, $16.

German W-3-DZZ all-band Dipole, balun with two traps, $25.

CETRON 572B/160TL 150w. Triodes for Linears, $18.

Used spotless COLLINS 75S-3A Receiver, with Collins speaker, c.w. filter, notch filter, $500.

GALAXY V., used, 10-80 mx Transceiver with 240v. a.c. power supply, $375.

SIDEBAND ELECTRONICS ENGINEERING

P.O. BOX 23, SPRINGWOOD, N.S.W., 2777 Telephone: **Springwood** 511-394

radioparts
PROPRIETARY LIMITED

CUSTOMER SERVICE

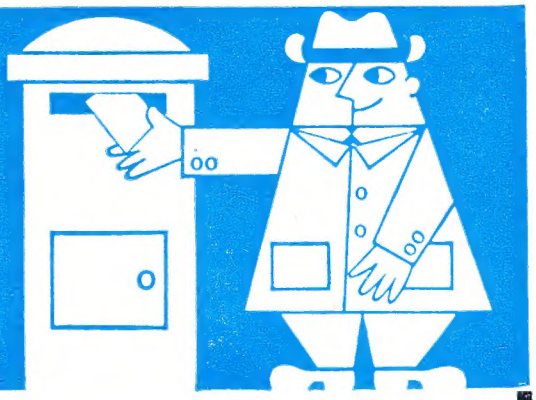

A STEREO-RADIO COMBINATION of Exceptional Quality featuring "ONKYO" HS303 SPEAKER UNITS, comprising:

"**RAPAR**" Storage Cabinet, waxed teak finish, large size (illustrated), 25" h. x 19" w. x 14" d. Trade Price $30.00 plus 2½% S/tax.

"**ONKYO**" HS303 Speaker Unit. Trade Price $80.00 plus 25% S/tax (each).

"**COMPAX**" CE5000 Solid State Stereo Tuner and Amplifier; 20 watts per channel, freq. response 20-20,000 cycles. Trade Price $135.20 plus 25% S/tax.

"**RAPAR**" Teakwood Gramo Base with hinged lid, 18" w. x 14" d. x 7" h. Trade Price $25.00 plus 25% S/tax.

"**DUAL**" Gramo Unit 1015, with "Nagaoka" NM33 Diamond Magnetic Cartridge. Trade Price $76.00 plus 25% S/tax.

RADIO PARTS PTY. LTD.

MELBOURNE'S WHOLESALE HOUSE

562 Spencer St., Melbourne, Vic., 3000. Phone 329-7888, Orders 30-2224

City Depot: 157 Elizabeth Street, Melbourne, Vic., 3000. Phone 67-2699

Southern Depot: 1103 Dandenong Rd., East Malvern, Vic., 3145. Ph. 211-6921

OPEN SATURDAY MORNINGS!

FEDERAL COMMENT

JOHN B. BATTRICK, VK3OR, Federal President, W.I.A.

In the I.A.R.U. Region I. Bulletin recently received was an editorial by John Clarricoats, O.B.E., G6CL. John, you will remember, was, while Secretary, the driving force behind the R.S.G.B. He now enjoys his retirement (?) as Secretary to I.A.R.U. Region I. Division. He headed his editorial:—"A Dream Comes True," and went on to say:

"Way back in 1950 when the idea of establishing an I.A.R.U. Region I. Division was first discussed at the Silver Jubilee meeting of the I.A.R.U. in Paris, the present chairman (SM5ZD) and the present Secretary (G6CL) of the Division talked over the possibility of adopting a Regional system of running the Union, but as the years went by the difficulties appeared to grow larger until during the winter of 1964, thanks to Mr. Herbert Hoover, Jnr., first steps were taken to inaugurate an I.A.R.U. Region 2 Division, although for some reason it has never assumed that title as of right preferring to be known, formally, as the Inter-American Union of Radio Amateurs—Region 2 Division.

"Last year Member Societies in Region 2 participated in a highly successful conference in Caracas, Venezuela, and as recently as Whitsun of this year the Executive of the Region gathered in Monterrey, Mexico, to discuss the problems fancing Amateur Radio in the Western Hemisphere.

"And now comes the good news that Societies in Region III., notwithstanding the vast distances involved, have established an I.A.R.U. Region III. Division. . . . A dream has at last come true, and I.A.R.U. has indeed become a live international organisation and not just a name."

In addition, John Huntoon, W1LVQ, Secretary to the A.R.R.L. and I.A.R.U. Hdq., reports on the matter as follows in issue No. 76 of the I.A.R.U. Calendar, June 1968:

"At mid-year 1968 the major item of interest to organised Amateur Radio was the successful establishment of a Region III. Division of I.A.R.U. Thus was completed on a world-wide basis the regional system whereunder Societies in a certain area are able to cope more effectively with problems and projects specialised in that area. It was perhaps the long-term objective of European Amateurs, led by the Radio Society of Great Britain, in efforts leading to the establishment of the Region I. Division, back in 1950.

"The Wireless Institute of Australia felt that the occasion of its federal convention in April might be a suitable basis for convening representatives of Societies in the Region, and through correspondence was encouraged to issue formal invitations to an inaugural congress. Japan, Philippines and New Zealand attended, along with Australian delegates; Ceylon, India, South Korea, Laos, Thailand and Hong Kong indicated support for the meeting but were unable to send representatives. Our President, Robert W. Denniston, W0DX, who was a leader also in the establishment of Region II., attended from the I.A.R.U. Hdq. and was requested to chair the sessions. . . .

"President Denniston extends his sincere congratulations to many Amateurs who had a part in the establishment of the Region III. Division, expresses his deep satisfaction with the spirit of dedication and co-operation which characteristed the meetings, and offers his best wishes for continued strengthening of Amateur bonds in Region III."

As was reported earlier in "A.R.," the form of the executive body of Region III. is somewhat different from that in Region I. A Directorate of five, representing the countries present at the Sydney conference has been appointed to act until the next Plenory scheduled for Tokyo in 1971. These Directors of Region III. Division I.A.R.U. are as follows:

W0DX, Bob Denniston, President I.A.R.U. and A.R.R.L.

VK3OR, John Battrick, Federal President W.I.A.

JA1BK, Kyoshi Misoguchi, Overseas Director J.A.R.L.

ZL3AZ, Tom Clarkson, Overseas Liaison Officer N.Z.A.R.T.

DU1EA, Emilo Asistores, Wireless Institute of the Philippines.

This last Society—W.I.P.—is a new one! At Sydney Emilio represented P.A.R.A.—Philippines Amateur Radio Association, and one of the documents he collected was a copy of a Divisional Constitution of W.I.A. On return to his country, P.A.R.A. and P.A.R.L. (the Philippines Amateur Radio League) amalgamated to form the one representative body—W.I.P., based on W.I.A. lines.

It may seem strange that W0DX is a Director of the Region III. Division, however this was the wish of delegates in Sydney—he holds his Directorship by virtue of his office of President of I.A.R.U., and the N.Z.A.R.T. in particular were very strongly of the view that any Regional association was to "assist the officers of I.A.R.U. headquarters." It was not envisaged that the Societies in Region III. would "go it alone" in a manner separate and perhaps divergent from I.A.R.U. headquarters. The inclusion of the President for the time being of the I.A.R.U. as a Director is our practical expression of this wish.

Since the conference in Sydney, a Secretariat was formed comprising members of the W.I.A. Federal Executive, viz.:

Chairman: VK3OR (W.I.A. Director).

Secretary-General: VK3IZ (Federal Secretary W.I.A.).

Members:

- VK3KI (Federal Vice-President W.I.A.).
- VK3QV (Federal Activities Officer W.I.A.).
- VK3ADW (Federal Intruder Watch Co-ord. W.I.A.).

The Secretariat is also assisted by VK3VX, George Pither, the I.T.U. Liaison Officer of W.I.A. We felt it was wise to keep George's office separate from the Regional Secretariat for the time being, so that the W.I.A. I.T.U. Fund can also be seen as separate from I.A.R.U. Region III. Funds. The I.T.U. Fund is in a separate bank account, set aside for a particular purpose, and cannot be used for any other purpose. It is in effect, over and above the organisation of Region III. Division and may be looked on as a W.I.A. second string. It amounts at the moment to over $6,000.

As far as funds of the Region III. Division are concerned, J.A.R.L. has agreed to contribute 400,000 Yen—approximately $1,200 per annum and W.I.A. agreed to contribute $600 per annum. (Thus $600 will be recovered from W.I.A. members at the rate of 20 cents p.a. per member.)

This matter of funds and finance brings up a quite important point. We as a Secretariat are charged with administering the Division—in terms of policy determined triennially at Plenary

meetings, and in between these Plenary meetings in terms of determination of the Directorate. We are also charged with handling funds—the remission of funds from Japan is subject to their Central Bank receiving a copy of a constitution and rules. Our Reserve Bank will also require such a set of rules—as may all banks in overseas centres before funds can be moved around the Region.

Michael Owen, VK3WI and the members of the Secretariat have drawn up an interim constitution for the I.A.R.U. Region III. Division. This runs to over 50 clauses and has been circulated to the five Societies who have appointed Directors. The preparation of this interim constitution for the Region III. Division, and the ensuing correspondence between countries has been the major activity since Sydney. Because we on the Secretariat are not prepared, or even **able** to act unless we are protected by proper rules, we have asked countries to adopt a somewhat unusual approach. We want them to adopt the interim constitution as it stands, and once it is adopted to then amend some of its clauses to improve it. Already certain valid and relevant objections have been raised, which can be the basis for amendment presently, however to get the Division "on the road" we must have some rules—however inappropriate they may seem in certain respects. A position of stalemate may be the outcome if we have to agree to rules in all details before we can act, because we certainly can't act without some sort of constitution!

Why the rush? Already I believe it is felt that W.I.A. was somewhat precipitous in calling the conference earlier this year, and with hindsight it may have been easier to have resolved the constitutional matters in Sydney—even at the expense of a longer conference. I feel that we have two years to do something in the Region to prepare for the next I.T.U. Conference, scheduled for late 1970 or early 1971. Perhaps our 1971 Plenary will have to be held earlier and prior to the I.T.U. Conference! Time may be running out—I hope we don't spend too much of it on polishing up a set of rules, but get down quickly to more active efforts. Emilio DU1EA, W.I.P. Director, does travel the Region in his capacity as Deputy Director of Civil Aviation in the Philippines, and could well make contact with administrations in our Region. I.A.R.U. headquarters has introduced D.A.R.E. (Develop Amateur Radio Everywhere) programmes into some countries of the Region. Perhaps the first way we could assist the officers of I.A.R.U. headquarters is to evaluate the efficacy of this programme, and to assist in introducing this elsewhere in the Region.

J.A.R.L. has ratified the interim constitution and at the same time suggested one amendment; W.I.A. has also ratified the interim constitution, and we await ratification from I.A.R.U. hdq., N.Z.-A.R.T. and W.I.P. When these are received we can invite membership from other countries and really get to work!

(Members of W.I.A. may be interested to know that JA1FG and JA1BK, who represented J.A.R.L. in Sydney, have made a personal gift of a Yaesu Musen FTDX400 Transceiver to the W.I.A. in appreciation of our hospitality in Sydney. This will be used by Executive to keep skeds on the Federal Communication Nets and by the Secretariat on the weekly Region III. Division skeds.)

Last month, Federal Vice-President reported on the activities of Executive and those at the Wodonga meeting on translators. He went on to refer to the forthcoming space frequency conference. It will be remembered that in the past W.I.A. could be said to have been one of the few effective voices from Region III., but now, if the I.A.R.U. Region III. Division can be made into an effective body, we can draw together the combined strength of the Region, thus the Amateur voice can be that much stronger.

DIRECTORS OF I.A.R.U. REGION 3 DIVISION

Top left (L-R): JA1FG, JA1BK, VK3KI, VK5TY.
Bottom left (L-R): VK3VX, VK3QV, VK3OR, DU1EA.
Top right: W0DX.
Bottom right (L-R): VK3IZ, ZL2APC, ZL2AZ.

S.S.B. Transmitter—An Amateur Engineering Project

PART TWO

H. F. RUCKERT, VK2AOU*

CIRCUIT DETAILS

The following circuit details are given with particular emphasis on mistakes made earlier, difficulties experienced and variations tried.

AUDIO AMPLIFIER

The a.f. amplifier has a gain of about 5,000, because the dynamic mike has only an output of about 2 mV. Therefore shielding of grid 1 and plate leads is necessary to reduce hum pick up and to maintain stability. The 100 μF. (10 μF. was too small) cathode by-pass capacitor of the 6AJ8 is necessary to prevent oscillation. The low impedance combination at the triode plate (22K ohm plate resistor and 0.1 μF. coupling capacitor) is vital to prevent distortion caused by the non linear voltage dependent load of the first Ge diode of the compressor. A 12AX7 twin triode, with 0.2 megohm plate resistor and 0.001 μF. coupling capacitor was quite useless.

A.f. response shaping cannot be carried out in front of the compressor because the compressor a.g.c. action would cancel the effect out. A small coupling capacitor at grid 1 of the 6BA6 cannot be used because the 50K ohm volume control setting would become frequency dependent. The plate load (1K ohm) and coupling capacitor (0.5 μF.) to the ring modulator must also be of low impedance to avoid distortion otherwise caused by the voltage dependent non linear load formed by the diode quartet.

The a.f. response shaping was therefore left to the crystal filter and carrier frequency position on the crystal filter response curve (slope), after many experiments, checking with a.f. generator and v.t.v.m. the result at each a.f. stage. This compressor[6] does not cause non linear distortions, as produced by a clipper used in the a.m. rig, if used in a reasonable manner only to prevent occasional excessive drive and flat topping and not to compensate gain differences when switching from band to band.

Speaking the vowels with apparent identical loudness and with similar pitch into the mike at first without, and then with the compressor 50% in, had the following results:

Vowel Spoken	Exciter Output in V. r.f. r.m.s. without Compressor	with Compressor
A	60	60
E	16	40
I	6	44
O	24	60
U	4	36

[5] "QST," February 1963, W3ZVN.

It can be seen that the compressor gives a far greater speech pulse density and more power per transmitted time interval. The linear amplifier must be able to handle this duty cycle, which means that some of the now popular transceivers could not use a compressor. The power supply would be overloaded and the economy style t.v. valves in the final would overheat too.

THE VOX, ANTI TRIP AND STANDBY CIRCUIT

The a.f. voltage at the plate of the 6BA6 is further amplified in half a 12AT7, and the second half acts as relay valve. To prevent sound from the receiver loudspeaker actuating the vox circuit and turning the transmitter on, the speaker voltage is at first amplified (EF12 or 9001, etc.) and connected to the first cathode of the 6AL5 (anti trip circuit), whilst the vox voltage goes to the second anode of the 6AL5 twin diode, here the two rectified voltages—which are of opposing polarity—are compared. The 100K ohm anti trip volume control (between EF12 and 6AL5) has to be so adjusted that the identical receiver speaker sound picked up the mike and the one amplified by the anti trip a.f. stages develops a similar but opposing voltage at the plate of the 6AL5. In this case the grid voltage of the relay triode (half 12AT7) is zero or slightly negative, and the relay will stay in the receive position.

When the op. talks into the mike, the grid of the relay valve becomes positive, and the valve draws more plate current, which operates the relay turning the transmitter on. There is,

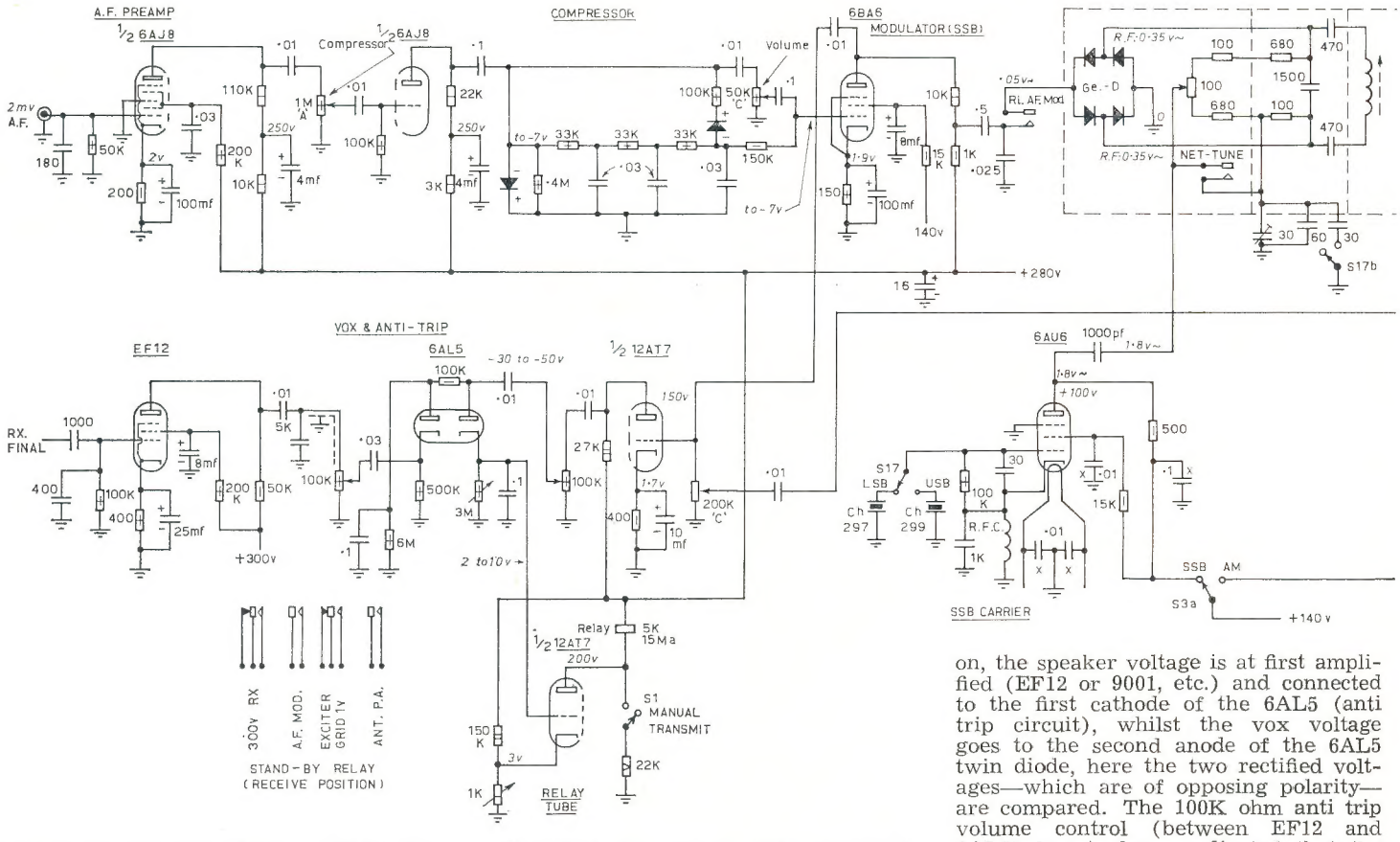

of course, some interaction between mike signal input strength, compressor and a.f. gain control setting, 100K ohm vox gain control (between 12AT7 and 6AL5), the 3 megohm time constant control, the anti trip level control and the relay valve bias, current level and relay sensitivity. The correct settings have to be found experimentally:

(a) Set valve bias (1K ohm) without speech or anti trip voltage so that the standby relay is only just still in receive position (resting). About 5-6 mA. go through this relay.

(b) Set compressor gain (1 megohm lin.) and modulation gain (50K ohm log.) for the usual speech level to obtain sufficient and linear drive.

(c) Open up the vox control (100K ohm) and time constant control (3 megohm) to obtain fast enough and sufficient vox action, e.g. positive relay valve grid voltage compared with the cathode potential. Use S1 to operate the transmitter.

(d) Set anti trip level (100K ohm) so that sound from the speaker cannot trigger the relay and transmitter action.

ing voltage of four valves is then reduced when netting.)

(c) Grid 1 bias changed from a.l.c. to —50 volts blocking voltage, or the limited blocking voltage for netting.

(d) Controlling the antenna relay (96v. x 40 mA.) from the negative bias supply of the p.a., which also turns on/off the screen grid voltage of the p.a. valves to disable the linear amplifier in receive position under all conditions. This relay is a 220v. a.c. 27 mA. relay, but it caused too much buzzing noise when a.c. operated.

The relay must not click too loud when it falls back into the receiving position or this sound will turn the tx on via the vox system, and this on/off action repeats itself so that the tx is out of control.

Typical operating voltages are shown on the circuit diagram and the valve pin connection circles. This is extremely helpful if trouble shooting has to be done, because one can quickly see or measure how many volts the various points should have. These values are

identical forward resistance." You must be very lucky if this is all you have to know about the ring modulator to make it work correctly. The circuit first used was published by an Amateur magazine. It used a triode crystal carrier oscillator without buffer, link coupling from the plate tuned circuit, 5v. r.f. r.m.s. to the ring modulator balancing resistor, putting 3.5 volts on the diodes. Many other circuits found in the literature did not mention the recommended r.f. voltage the diodes should obtain.

The higher the r.f. level at the ring modulator (with carrier effectively cancelled out), the less amplification is needed in the following stages, which means less instability difficulties, less hum and better carrier suppression. One may assume that Ge diodes with 100 volt inverse voltage are safe at the 3 to 5 volt r.f. level. These diodes can often take 100 mA. pulse current, so my diodes looked okay.

The ohm meter test to select matched groups of diodes is extremely crude, measuring with a high resistance volt-

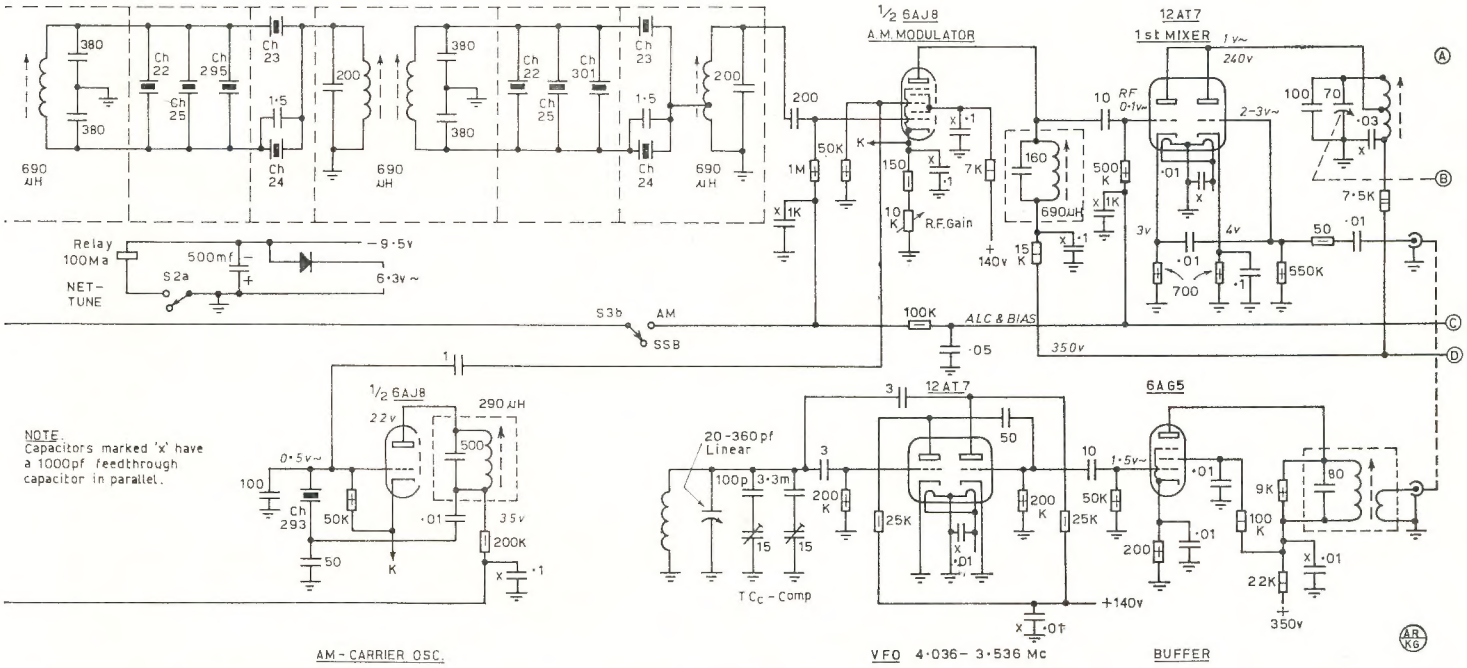

Too much anti trip voltage makes it impossible for vox to turn the transmitter on, unless the op. shouts too loud, which may cause distortions. Switch S1 off.

(e) Manual rx-tx operation: Turn vox control low and use standby switch S1.

A stiff regulated B+ source had to be used for the plate supply of the relay valve with the current going through the 5,000 ohm relay winding, or the relay used did not obtain sufficient power (80v. × 6 + 10 mA.) to operate all contacts in a reliable manner. A more sensitive relay would be desirable.

Standby relay contacts:

(a) B+ on/off in receiver affecting r.f. stages and mixer but not the oscillators.

(b) A.f. input on/off to ring modulator, to prevent modulating the exciter when netting. (The exciter grid block-

also of great interest to other home constructors, to compare their values with those others used.

RING MODULATOR AND CARRIER OSCILLATOR

We can find quite a number of different balanced modulators in the literature. I chose the ring modulator (diode quartet) because commercial communications apparatus used and still use this method very successfully. The apparent simplicity seems the season why the Amateur literature brings out very little about the finer points of this circuit, and it was here that I struck serious difficulties (distortion) after checking a long list of possible other sources for the trouble. Stages were reconstructed and the circuit was many times modified.

The book says: "Select four diodes with the help of an ohm meter which have a high inverse resistance and

age source a non linear resistance, which is load and temperature sensitive, can be tricky. The only truely matched diodes can be found by testing the full dynamic voltage range, using the finally applied load resistance and current and the same temperature and frequency. This is easier said than done, because the load resistance for each diode is formed by the three other ring connected diodes, which are voltage, temperature and frequency (its capacity changes) dependent. Attached L, C and R add to the complexity.

After four diodes had been found which gave, under certain conditions, a good carrier cancellation of over 40 db., it was observed that the balancing potentiometer (100 ohm carbon moulded track) had to be reset after a few words had been spoken into the mike, or after the other carrier crystal had been switched in which gave a different r.f. output. New balance was only

obtained after the plate circuit of the carrier oscillator had been retuned (this was the old circuit). The balancing trimmer had also to be reset. This made l.s.b. to u.s.b. changes rather complicated.

Using the XYLs hair dryer showed that the balance was temperature affected, and a thermistor was tried in one of the resistor lines to obtain automatic compensation. Using the BC211 frequency meter as an s.s.b. receiver revealed that the non linear and greatly fluctuating load (the diodes presented) caused f.m. of the 414 Kc. carrier crystal oscillator, which did not sound like s.s.b. Changing the carrier oscillator valve to pentode operation in an e.c.o. circuit with 330 ohm plate resistor (no more L and C circuit) and using a 1,000 pF. coupling capacitor to the ring modulator solved the f.m. problem and plate circuit tuning difficulty.

Care must be taken that the l.s.b. and u.s.b. crystals give the same r.f. voltage or the balancing is not identically good when switched from 80 mx l.s.b. to 20 mx u.s.b. operation.

Earlier an a.f. transformer (50:1) and r.f. chokes were used between the 6BA6 and the ring modulator. Matching difficulties were first suspected, but 100 c/s. hum pick up by the chokes and the transformer was identified as the trouble source. Every low a.f. input note gave two a.f. output signals behind the filter.

The reports on s.s.b. quality were still conflicting; some said it sounds okay, others said that the first CQ call or so was clear but later distortion developed, some claimed that they could not resolve the signal at all (only local stations), etc. Listening to one's own transmission (speech) is misleading and a tape recorder becomes very useful to check what goes on.

None of the many helpful suggestions offered by friends proved to have hit the spot. Several other difficulties (some only occasionally) occurred in the following stages (later discussed) were eventually identified and cured, but the modulation was still no good. This transmitter had an unusual sickness, so it appeared. I mention this in detail, because it shows that copying a circuit without understanding it may sometimes not work at all. A discussion with a physicist, who had made good Ge diodes, including those for ring modulators, did teach me that the smallest components are apparently the most complicated ones.

Soon after, on the first hot day (95° F.), followed a lengthy experiment, which heated the rig up (no cooling fan was installed at that time), a QSO was made, when it was observed that the output fell. More a.f. gain brought it back but only for a moment. The carrier became stronger, the gain fell back and distortions resulted. From these circumstances and meter readings, it became clear that the ring modulator diodes had packed up. As we often experience, extreme conditions revealed the trouble spot.

Diode data was now obtained, more informatory than the few handbook values. A diode quartet was attached to a filament transformer with voltage taps and the current in the ring was measured versus a.c. voltage across opposing ring positions.

V. A.C.	mA. D.C.
1	0.4
2	3.5
4.5	8
6.5	35

at 25°C.

It was now obvious that the safe current and power ratings of the diodes had been exceeded, especially at high operating temperatures.

The problems mentioned earlier were now quickly solved by installing Si diodes, which had very uniform characteristics, lower forward resistance and higher inverse resistance than the various types of Ge diodes tested so far. They can easily take the temperatures involved without runaway effects or derating. The carrier voltage across each diode was reduced to 0.5v. r.f. r.m.s. The carrier cancelling potentiometer (100 ohm) and trimmer (30 pF.) do no longer require re-adjustment and are not needed at the front panel.

The diodes for ring modulators must be dynamically matched. Suitable Ge diodes are those for low impedance load (not the f.m. types). These diodes draw usually 15 mA. with 1v. d.c. The r.f. voltage has to be kept low if >25°C. (77°F.) ambient temperatures are used.

Published circuits which do not show all important voltage values are not very helpful to train Radio Amateurs.

THE CRYSTAL FILTER

Following similar frequency steps as used by a well known U.S. manufacturer, I had decided to build a crystal filter at about 400 Kc. using surplus FT241 crystals. An excellent paper by DJ2KY[6] described a simple method.

The accompanying table shows crystal channel numbers and frequencies. Within each bracket is a group of crystals with frequencies symmetrically spaced above and below the value of the centre crystal (channel number).

I used group No. 7 for my filter. Both filter sections use the same No. 23 and 24 bridge series crystals. The —6 db. filter bandwidth is about 50% wider than the oscillator frequency spacing of these crystals, which is just right.

[6] "DL-QTC," August 1961.

FT241 CRYSTALS—Channel Nos. 0 to 79 and 270 to 375

	Fund. Freq. Kc.	Channel No.	
	370.370	0	
	372.222	1	
	374.074	2	
	375.000	270	
	375.962	3	
	376.388	271	
	377.777	272	
	379.166	273	
	379.630	5	
	380.555	274	1
	381.481	6	
2	381.944	275	
	383.333	7 276	
	384.722	277	
	385.185	8	
	386.111	278	
	387.037	9	
	387.500	279	
	388.888	10 280	
	390.277	281	
	390.741	11	
	391.666	282	3
	392.593	12	
4	393.055	283	
	394.444	13 284	
	395.833	285	
	396.292	14	
	397.222	286	
	398.148	15	
	398.611	287	
	400.000	16 288	
	401.388	289	
	401.852	17	
	402.777	290	5
	403.704	18	
6	404.166	291	
	405.555	19 292	
	406.944	293	
	407.407	20	
	408.333	294	
	409.259	21	
	409.722	295	
	411.111	22 296	
	412.500	297	
	412.963	23	
	413.888	298	7
	414.815	24	
8	415.277	299	
	416.666	25 300	
	418.055	301	
	418.519	26	
	419.444	302	
	420.370	27	

	Fund. Freq. Kc.	Channel No.	
	420.833	303	
	422.222	28 304	
	423.611	305	
	424.074	29	
	425.000	306	9
	425.926	30	
	426.388	307	
	427.777	31 308	
	429.166	309	
10	429.630	32	
	430.555	310	
	431.481	33	
	431.944	311	
	433.333	34 312	
	434.722	313	
	435.185	35	
	436.111	314	11
	437.037	36	
	437.500	315	
	438.888	37 316	
	440.277	317	
12	440.741	38	
	441.666	318	
	442.593	39	
	443.055	319	
	444.444	40 320	
	445.833	321	
	446.296	41	
	447.222	322	13
	448.148	42	
	448.611	323	
	450.000	43 324	
	451.388	325	
14	451.852	44	
	452.777	326	
	453.704	45	
	454.166	327	
	455.555	46 328	
	456.944	329	
	457.407	47	
	458.333	330	15
	459.259	48	
	459.722	331	
	461.111	49 332	
	462.500	333	
16	462.963	50	
	463.388	334	
	464.815	51	
	465.277	335	
	466.666	52 336	
	468.055	337	
	468.519	53	
	469.444	338	17
	470.370	54	

	Fund. Freq. Kc.	Channel No.	
	470.833	339	
	472.222	55 340	
	473.611	341	
	474.074	56	
18	475.000	342	
	475.926	57	
	476.388	343	
	477.777	58 344	
	479.166	345	
	479.630	59	
	480.555	346	19
	481.481	60	
	481.944	347	
	483.333	61 348	
	484.722	349	
	485.185	62	
20	486.111	350	
	487.037	63	
	487.500	351	
	488.888	64 352	
	490.277	353	
	490.741	65	
	491.666	354	21
	492.593	66	
	493.055	355	
	494.444	67 356	
	495.833	357	
	496.296	68	
22	497.222	358	
	498.148	69	
	498.611	359	
	500.000	70 360	
	501.388	361	
	501.852	71	
	502.777	362	23
	503.704	72	
	504.166	363	
	505.555	73 364	
	506.944	365	
	507.407	74	
24	508.333	366	
	509.259	75	
	509.722	367	
	511.111	76 368	
	512.500	369	
	512.963	77	
	513.888	370	25
	514.815	78	
	515.277	371	
	516.666	79 372	
	518.055	373	
	519.444	374	
	520.833	375	

The shunt crystals, No. 22 and 25, again evenly spread from No. 298 (centre), are used in both sections to reduce the side lobe of the filter response curve, cutting —80 db. or even deeper notches in the lobes. The first filter section has a No. 295, and the second a No. 301 shunt crystal, sufficient to reduce the far off resonance side lobes. The 1.5 pF. parallel capacitors attached to the No. 24 crystals allow a compromise between steep slope or less side lobes.

The filter response curve shows that this filter is as good as required and as good as the best we can find in Amateur equipment. The shielding between filter sections and input to output circuit has to be extremely good.

The crystal frequencies finally used (see Table 1) differ slightly because most of these crystals saw service in exotic areas and some have corroded electrode to wire solder connections, which are difficult to repair. Each crystal holder has to be opened and checked, or the filter will never or only intermittently work. Additional crystals were obtained via the extremely helpful VK2AVA, and grinding a corner of the crystal brought them to the desired spot frequency.

Channel No.	Measured Kc.	
295	409.720	
2 x 22	411.240,	411.180
297	412.590	Carrier
2 x 23	413.212,	413.190
298	413.705	Centre
2 x 24	414.736,	414.856
299	415.495	Carrier
2 x 25	416.740,	416.835
301	418.060	

Table 1.

FILTER TESTING

(a) The g.d.o. was equipped with a coil and parallel capacitors to cover the range 414 ±5 Kc., using a large 0-100° knob. This range was carefully calibrated with the BC211 frequency meter. The g.d.o. feeds into the input coil of the filter, the other coil end is earthed. A v.t.v.m. measures the output at the plate of the 6AJ8 heptode following the filter. Check coil tuning at the centre frequency. Check slope and side lobe attenuation. The slugs of the tuned circuits at the grid and plate of the 6AJ8 valve have to be carefully adjusted to obtain a flat top curve, or the audio response of the l.s.b. and u.s.b. will not be identical and flat.

(b) Plug No. 298 crystal in carrier oscillator, switch S2 to "netting", measure drive with exciter r.f. output voltmeter (included), peak all six 414 Kc. filter coils.

(c) Connect an audio signal generator to the microphone jack, switch s.s.b. carrier on, measure r.f. output at the exciter, replace driver pi output capacity (from p.a. valves) with a 60 pF. capacitor (a 1:4 cap. voltage divider may be needed, if a Ge diode r.f. probe v.t.v.m. is used). Check driver r.f. output versus a.f. input.

It may have been noticed that the carrier frequencies are further away from the original No. 297 and No. 299 crystal frequencies. This was necessary to avoid too much bass (from the op's voice and dynamic mike) from passing the filter.

This effective way of audio response shaping has the advantage of further suppressing the carrier and unwanted sideband. The excellent filter shape factor of 1:1.68 [Δf (—60 db.) ÷ Δf (—6 db.) = 1.68] allowed a carrier suppression of >40 db. on the filter slope alone. Adjusting the carrier frequency can have remarkable results as far as voice intelligibility is concerned. The smaller the bandwidth (less treble) the less bass must be used too. Here again the tape recorder is very helpful for comparing the operator's voice:

(a) Recorded with hi-fi mike.
(b) Recorded with DX mike, or what have you.
(c) Recorded with a.f. taken from behind each a.f. stage.
(d) Recorded and received voice taken after each r.f. and mixer stage and from the p.a. operating the linear final into a dummy load.

THE A.M. MIXER (MODULATOR)

The 6AJ8 valve following the crystal filter has a dual function.

S.S.B.: Amplifying the s.s.b. signal to the maximum level the first mixer can handle, because high gain is easier obtained at 414 Kc. with 2.5 Kc. bandwidth than at 28 Mc. with 500 Kc. bandwidth. Usually only 10% of the gain of this stage is needed.

A.M.: The oscillator B+ and the a.f. is switched (S3a/b) to this 6AJ8 valve. The triode works as a.m. carrier oscillator valve and a fraction of a volt controls grid 3 of the heptode section. A.f. voltage from a separate volume control (200K ohm log.) reaches via switch S3b grid 1 of the heptode. The a.m. carrier can be keyed for c.w. operation or to test the final with max. drive.

The valve holders of valves carrying r.f. voltage are all mounted on top of the chassis, standing on their centre shield, and the "no r.f." carying contact lugs are soldered to 1,000 pF. feed-through capacitors to simply shielding and to keep all r.f. out of the below chassis space. Capacitors marked with X are in parallel to these feed-through capacitors.

FIRST MIXER AND V.F.O.

The left triode of the 12AT7 mixer valve is the actual mixer with cathode injection of the oscillator (v.f.o.) voltage. The other triode has grid injection of the same oscillator voltage, causing similar but out of phase plate current as far as the v.f.o. signal is concerned, which therefore largely cancel out in the plate circuit, forming a balanced mixer. The stage gain of ten is halved by the double tuned 50 Kc. wide bandpass circuit.

It is very interesting to check with an absorption wave meter how well unwanted mixing products and the carrier are suppressed, because the following fixed tuned and damped wide band circuits are far less discriminating. Tapping the mixer plate half way down the coil helped too. The ganged air capacitor tunes from 4.450 to 3.950 Mc. with a 90° rotation. The v.f.o. voltage is 20 times or more the s.s.b. mixer input signal, which helps to reduce mixer distortion.

The desirable features of the Franklin oscillator are well known. The air capacitor used (20 years old) has a frequency linear cut rotor (if a special parallel C is used) which, in combination of the right coil and worm reduction gear drive (ex U.S. surplus) and a 0 to 500 counting dial knob, was so adjusted that the numbers represent the kilocycle to be added to the lower band edge, e.g. direct digital frequency read out. Considerable patience is required to get this feature right.

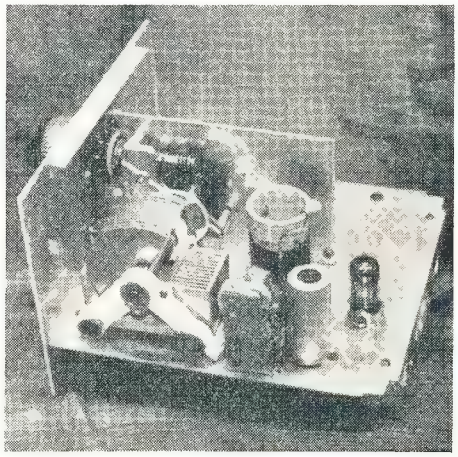

VFO (chassis open): The special stator cut of the air capacitor, to achieve frequency linear tuning, is visible. Rotor and stator are machined from a block each and have quartz insulation. The worm gear drive has split gears, spring loaded. The coil wire is glued to the ceramic former. Half the chassis is free for the separate c.o. of the tx.

Differential ± temperature drift compensation is included which maintains the total capacity but allows to increase or reduce the effect of a 20 pF. N3300 (TCc) or a 100 pF. P100 (TCc) ceramic capacitor. The 15 pF. trimmers are very stable miniature air capacitors. All other capacitors near the tuned circuit are NPO ceramic types. To reduce the overall drift, no magnetic core was used in the coil.

This v.f.o. is many times more stable than the one in the BC221 frequency meter. A buffer stage with the 6AG5 valve follows. The buffer output is matched with a link coil to the two feet long co-axial cable and mixer resistance. The output voltage lies between 2 and 3v., which is about right for the typical 12AT7 mixer circuit. The v.f.o. frequency range is 4.036 to 3.536 Mc.

Earlier an unexpected beat note and signal was observed. It was found that the balancing triode of the mixer started to oscillate (tuned grid-tuned plate) using the buffer plate circuit as grid tuned circuit. The 50 ohm grid stopper prevented the trouble finally. This sort of experience may be the reason why the industry so often uses a cathode follower as buffer today.

(To be continued)

REMEMBRANCE DAY CONTEST RESULTS

TASMANIA WINS R.D.

Congratulations to VK7 for their well deserved win. They had the highest participation, highest ever top-six log average, and the highest State score since VK5 won with 5707 in 1964.

An analysis of the last eight years' top logs shows that 1968, under the present scoring table, proved to be the best year, with all States' top logs scoring over 1,200 points. VK7DK's tally of 1822 points for 18¾ hours of operating could stand as a record for some time.

Band conditions were most favourable with many logs showing numerous 10 metre contacts. S.s.b. usage also was noticeably predominate, and, because of it, the bands appeared able to cope with the station pile-ups that occurred without the mutual interference known of old.

Once again congratulations to Tasmania for a fine effort and we hope that next year all States will put up a good fight, trying to win.

—Neil Penfold, F.C.M. for F.C.C.

[See Analysis of R.D. Results after Listeners' results.—Ed.]

DETAILS OF STATE SCORES

	Log Entry	Licensees	% Participation	Average Top Six Logs	Total State Points	State Score
VK2	72	1,744	4.1	1,114	21,407	1,998
VK3	60	1,702	3.5	1,041	20,689	1,771
VK4	60	661	9.0	1,102	18,546	2,771
VK5	85	720	11.8	1,132	19,251	3,373
VK6	83	424	19.6	1,115	18,809	4,795
VK7	65	217	30.0	1,294	13,577	5,367

STATE TROPHY WINNER

TASMANIA

NEW SOUTH WALES

(Award Winners in Bold Type)

Phone—

VK2YN	**1101 Pts.**	VK2APP	183 Pts.
2XT	872 ,,	2EY	166 ,,
2ANO	859 ,,	2AIC	162 ,,
2BGF	855 ,,	2RV	142 ,,
2AFD	711 ,,	2SS/M	142 ,,
2SJ	620 ,,	2BLF	123 ,,
2AGF	618 ,,	2EU	118 ,,
2AHV	605 ,,	2HQ	97 ,,
2AJY	513 ,,	2KA	88 ,,
2APQ	506 ,,	2YS	73 ,,
2AIA	422 ,,	2AKV	70 ,,
2RX	406 ,,	**2ZCF**	69 ,,
2BMK	401 ,,	2ADL	68 ,,
2AEC	312 ,,	2CU	46 ,,
2BDB	311 ,,	2BKW	41 ,,
2ADA	290 ,,	2AVT	37 ,,
2VG	278 ,,	2LA	34 ,,
2ACZ	264 ,,	2OT	25 ,,
2AWN	247 ,,	2ZCT	20 ,,
2MW	247 ,,	2AAH	15 ,,
2DK	241 ,,	2GJ	13 ,,
2AKR	210 ,,	2ZHZ	11 ,,
2AFI	187 ,,	2ZIC	16 ,,

C.w.—

VK2NS	**566 Pts.**	VK2HW	109 Pts.
2QL	429 ,,	2GD	101 ,,
2GW	419 ,,	2PQ	99 ,,
2ANZ	348 ,,	2AJQ	94 ,,
2VN	265 ,,	2RJ	87 ,,
2AGI	259 ,,	2RA	60 ,,
2YB	223 ,,	2HZ	56 ,,
2GT	202 ,,	2OY	48 ,,
2ZO	113 ,,		

Open—

VK2BO	**1227 Pts.**	VK2EL	406 Pts.
2DO	1161 ,,	2BNA	315 ,,
2BCP	587 ,,	2PU	314 ,,
2RB	489 ,,	2AGS	158 ,,
2CK	**443 ,,**		

VICTORIA

Phone—

VK3VK	**1251 Pts.**	VK3AJK	229 Pts.
3WW	1048 ,,	3KO	228 ,,
3ARD	1039 ,,	3ADS	203 ,,
3ADW	1015 ,,	3QZ	187 ,,
3SM	811 ,,	3AJP	176 ,,
3AOW	791 ,,	3AWV	172 ,,
3RV	704 ,,	3ZX	144 ,,
3OM	601 ,,	3BD	119 ,,
3YQ	550 ,,	3ACA	112 ,,
3DG	516 ,,	3WY	104 ,,
3YC	485 ,,	3ABA	101 ,,
3AMK	479 ,,	3ARV	71 ,,
7DJ/3	445 ,,	3CO	39 ,,
3ATN	394 ,,	3OW	34 ,,
3XY	371 ,,	3AXU	33 ,,
3AR	340 ,,	3AUB	33 ,,
3ARM	333 ,,	**3ZUE**	24 ,,
3EG	320 ,,	3DY	20 ,,
3EF	287 ,,	3ZBB	15 ,,
3AUN	276 ,,	3ZWJ	13 ,,
3ASQ	272 ,,	3AER	12 ,,
3HE	243 ,,		

C.w.—

VK3APJ	**658 Pts.**	VK3RJ	126 Pts.
3XB	634 ,,	3IB	88 ,,
3OP	563 ,,	3AXK	84 ,,
3QK	401 ,,	3KS	43 ,,
3ABR	**396 ,,**	3AAL	40 ,,
3APN	331 ,,	3AKT	17 ,,

Open—

VK3ASW/P	**1083 Pts.**	VK3QI	169 Pts.
3AKS	724 ,,	3VF	150 ,,
3QV	542 ,,		

QUEENSLAND

Phone—

VK4WW	**1129 Pts.**	VK4XN	48 Pts.
4LB	1054 ,,	4XC	45 ,,
4PP	985 ,,	4HR	42 ,,
4CP	982 ,,	4EQ	39 ,,
4LT	951 ,,	4VJ	39 ,,
4XY	903 ,,	4GS	38 ,,
4BQ	743 ,,	4KE	36 ,,
4UA	701 ,,	4HD	35 ,,
4LZ	**681 ,,**	4HA	32 ,,
4DO	645 ,,	4UG	32 ,,
4LE	543 ,,	4XV	30 ,,
4LW	423 ,,	4EH	28 ,,
4LJ	392 ,,	4JI	27 ,,
4XZ	342 ,,	4CE	23 ,,
4ZW	317 ,,	4RG	23 ,,
4UW	251 ,,	4BG	22 ,,
4ZT	242 ,,	4TC	22 ,,
4FN	215 ,,	4LK	20 ,,
4RL	174 ,,	**4ZHO**	20 ,,
4XR	170 ,,	**4ZHW**	20 ,,
4NB	159 ,,	4JW	19 ,,
4HB	157 ,,	4GT	18 ,,
4CZ	155 ,,	4KS	18 ,,
4LN	112 ,,	4SF	18 ,,
4XJ	109 ,,	4RT	15 ,,
4HW	98 ,,	4ZTL	15 ,,
4AV	93 ,,	4ZAL	13 ,,
4QW	93 ,,	4ZGT	13 ,,
4QC	88 ,,	4NG	10 ,,
4PJ	86 ,,	4NZ	8 ,,
4EB	71 ,,	4ZRE	5 ,,
4RO	68 ,,	4ZRG	5 ,,
4SL	65 ,,	4ZRO	5 ,,
4EF	54 ,,	4ZRS	5 ,,

C.w.—

VK4XW	**367 Pts.**	VK4WO	78 Pts.
4UC	354 ,,	4ZB	64 ,,
4ES	199 ,,	4RE	33 ,,
4XP	168 ,,	4AW	13 ,,
4KK	96 ,,		

Open—

VK4RH	**1398 Pts.**	VK4MY	253 Pts.
4PX	1065 ,,	4LO	150 ,,
4CK	**269 ,,**		

SOUTH AUSTRALIA

Phone—

VK5FO	**1350 Pts.**	VK5PC	73 Pts.
5FT	1267 ,,	5GF	65 ,,
5BI	1021 ,,	5KF	63 ,,
5QX	919 ,,	5KE	62 ,,
5EF	698 ,,	**5ZNH**	**60 ,,**
5WC	637 ,,	5MQ	67 ,,
5KG	540 ,,	5LI	53 ,,
5TY	495 ,,	5TU	48 ,,
5NM	440 ,,	5ZQ	44 ,,
5XM	405 ,,	5ZDX	42 ,,
5OH	392 ,,	5AV	40 ,,
5HM	334 ,,	5GZ	40 ,,
5AX	332 ,,	5ZAR	39 ,,
5FL	328 ,,	5ZL	38 ,,
5GX	326 ,,	5VL	35 ,,
5JC	317 ,,	5EU	29 ,,
5WG	301 ,,	5ZKK	29 ,,
5LC	260 ,,	5FZ	27 ,,
5ZZ/T	246 ,,	5CL	27 ,,
5EK	237 ,,	5ZEJ	24 ,,
5GN	204 ,,	5SH	23 ,,
5NH	168 ,,	5ZIB	22 ,,
5DO	154 ,,	5FI	21 ,,
5DE	149 ,,	5DI	20 ,,
5SS	143 ,,	5DF	17 ,,
5UA	139 ,,	5ZKG	17 ,,
5LQ	134 ,,	5IJ	16 ,,
5CH	133 ,,	5ZEI	15 ,,
5RR	128 ,,	5ZZX	12 ,,
5DV	111 ,,	5ZK	12 ,,
5UF	109 ,,	5ZSW	9 ,,
5BV	107 ,,	5ZLT	9 ,,
5WN	94 ,,	5ZFJ	6 ,,
5ON	85 ,,		

C.w.—

VK5AU	**251 Pts.**	VK5OR	93 ,,
5HO	198 ,,	5TL	68 ,,
5FM	124 ,,	5JG	18 ,,
5LD	106 ,,		

Open—

VK5GW	**1238 Pts.**	VK5WI	119 Pts.
5CV	979 ,,	**5QR**	84 ,,
5LN	938 ,,	5NK	80 ,,
5WO	444 ,,	5RK	60 ,,
5ZX	305 ,,	5ST	15 ,,
5XV	287 ,,		

WESTERN AUSTRALIA

Phone—

VK6XX	**1419 Pts.**	VK6ER	50 Pts.
6BU	955 ,,	6YL	48 ,,
6KY	870 ,,	6GL	47 ,,
6DA	725 ,,	6BO	34 ,,
6RY	648 ,,	6GH	33 ,,
6DT	630 ,,	**6ZCB**	31 ,,
6WY	592 ,,	6KW	31 ,,
6SM	445 ,,	6ZBB	30 ,,
6MF	369 ,,	6CR	27 ,,
6FN	361 ,,	6ZFH	26 ,,
6KK	357 ,,	6MM	26 ,,
6CN	285 ,,	6ZCW	25 ,,
6XW	277 ,,	6CD	23 ,,
6WL	270 ,,	6ZGP	22 ,,
6FG	245 ,,	6KH	21 ,,
6XO	214 ,,	6ZBV	21 ,,
6NM	159 ,,	6ZGO	21 ,,
6CY	139 ,,	6ZFO	21 ,,
6DI/P	136 ,,	6NJ	20 ,,
6MO	130 ,,	6ZFD	20 ,,
6RX	126 ,,	6ZED	19 ,,
6KJ	117 ,,	6ZKR	18 ,,
6KM	107 ,,	6ZDC	16 ,,
6TY	93 ,,	6ZFY	15 ,,
6AB/P	82 ,,	6ZBY	13 ,,
6EZ	81 ,,	6LC	10 ,,
6JA	81 ,,	6ZAF	10 ,,
6TX	78 ,,	6ZAZ	9 ,,
6BT	78 ,,	6ZEK	8 ,,
6SE	60 ,,	**6TH**	5 ,,

C.w.—

VK6WT	**463 Pts.**	VK6QJ	55 Pts.
6RS	173 ,,	6WW	51 ,,
6KP	158 ,,	6RP	43 ,,
6AS	101 ,,	6GA	30 ,,
6AJ	89 ,,	6RB	14 ,,
6ZZ	63 ,,		

Open—

VK6RU	**1651 Pts.**	VK6AI	319 Pts.
6BE	961 ,,	6UT	168 ,,
6CW	835 ,,	6TU	147 ,,
6PH	820 ,,	6JK	119 ,,
6NS	681 ,,	6WI	64 ,,
6ZW	478 ,,	6LU	57 ,,
6JC	396 ,,	6MA	38 ,,

TASMANIA

Phone—

VK7WH	1673 Pts.	VK7RX	29 Pts.
7TX	1254 ,,	7ZLH	26 ,,
7MD	671 ,,	7ZJG	24 ,,
7PA	559 ,,	7ZBJ	23 ,,
7LS	555 ,,	7ZAS	23 ,,
7SS/P	508 ,,	7EB	22 ,,
7EJ	482 ,,	7BQ	22 ,,
7JF	282 ,,	7DA	21 ,,
7WF	247 ,,	7ZRV	19 ,,
7SF	200 ,,	7CB	19 ,,
7BM	190 ,,	7ZOR	18 ,,
7AB	140 ,,	7ZCP	17 ,,
7PF	135 ,,	7JP	16 ,,
7MX	106 ,,	7KH	15 ,,
7LZ	91 ,,	7MR	14 ,,
7LD	82 ,,	7KC	14 ,,
7PJ	69 ,,	7JD	13 ,,
7IL	62 ,,	7ZCW	13 ,,
7KK	57 ,,	7DR	11 ,,
7CK	48 ,,	7NZ	10 ,,
7FM	46 ,,	7TT	9 ,,
7ZKJ	38 ,,	7ZWX	7 ,,
7ZRO/P	36 ,,	7ZAK	7 ,,
7PS	32 ,,	7ZRJ	7 ,,
7ZFL	30 ,,	7ZXT	6 ,,

C.w.—

VK7ZL	310 Pts.	VK7OM	57 Pts.
7LJ	88 ,,		

Open—

VK7DK	1822 Pts.	VK7ZX	55 Pts.
7SM	1574 ,,	7YL	50 ,,
7ZZ	767 ,,	7BJ	43 ,,
7AL	357 ,,	7JB	43 ,,
7NC	266 ,,	7KS	28 ,,
7RY	97 ,,	7HW	22 ,,

VKs 1, 8, 9, 0

Phone—

VK1JG	698 Pts.	VK0AL	106 Pts.
8DI	606 ,,	0VK	72 ,,
9WD	1001 ,,		

C.w.—

VK8HA 276 Pts.

Open—

VK8KK	1147 Pts.	VK9DJ	1121 Pts.

LISTENERS' SECTION

New South Wales

	Points
P. Grido	1413
J. M. Hilliard	850
P. Linsley	783
F. McGrath	533
N. Jays	429
R. B. McIntosh	307
D. W. Shephard	261
D. Grantley	225

Victoria

R. Trenayne	1215
A. Cox	864
G. Armstrong	739
C. Consiglio	673
R. Hanel	643
M. G. White	462
T. Hambling	391
E. Trebilcock	333
L. Milne	236

Queensland

K. D. Cunningham	564

South Australia

	Points
S. Ruediger	1345
P. Field	232
L. M. Earl	356
C. H. Hannaford	346
J. Crawford-Lindsay	343
R. Edmeades	142

Western Australia

P. W. Drew	1600
P. L. Jackson	1413
K. Woodley	682
R. P. Lockley	379

Tasmania

B. Livingstone	1076
J. Everett	1020
B. Mutton	954
A. Dixon	258

Papua-New Guinea

R. Stewart	376

ANALYSIS OF R.D. RESULTS

Top Six Logs for 1968

VK2BO	1227 Points	399 Contacts
3VK	1251 ,,	427 ,,
4RH	1398 ,,	463 ,,
5FO	1350 ,,	497 ,,
6RU	1651 ,,	605 ,,
7DK	1822 ,,	606 ,,

Top Log Scoring

1960	1961	1962
VK2AHH/1011	VK2AHM/1215	VK2AHM/1218
3APJ/971	3ALZ/874	3ALZ/813
4UX/958	4DP/919	4RH/756
5NO/1227	5NO/1389	5MS/1286
6RU/1105	6RU/903	6RU/889
7RX/971	7MS/807	7MS/735

1963	1964	1965
VK2AHM/1205	VK2AHM/1089	VK2AHM/1116
3ALZ/826	3MO/965	3MO/1065
4DJ/778	4RH/920	4RH/1091
5ZP/1440	5ZP/1270	5NO/1226
6CL/807	6CL/560	6RY/759
7AI/657	7SM/485	7DK/938

1966	1967	1968
VK2AHM/1304	VK2BO/1037	VK2BO/1227
3MO/1273	3MO/1341	3VK/1251
4RH/1369	4RH/1329	4RH/1398
5EF/916	5NY/1112	5FO/1350
6RU/1365	6RY/1138	6RU/1651
7SM/1290	7SM/1334	7DK/1822

Total Log Entries

1960 432	1963 483	1966 474
1961 466	1964 473	1967 435
1962 493	1965 418	1968 425

Total Licensees used in Scoring

1960 3982	1963 4314	1966 3709
1961 4086	1964 3595	1967 5277
1962 4141	1965 3765	1968 5468

☆

ERRATA

Readers are asked to note the following corrections to "A Table Top S.s.b. Transceiver for Six Metres," Sept., 1968, "A.R.":—

1. Coupling capacitor between plate of V9 and grid of V10 omitted. Its value is 220 pF.
2. The 20 pF. drift adjust capacitor is a N750 not NPO.
3. The 0.001 uF. capacitor from the a.l.c. line to earth should be 0.1 uF.
4. The 6BE6 mixer screen resistor should be 25K 1w.

W.I.A. D.X.C.C.

Listed below are the highest twelve members in each section. Position in the list is determined by the first number shown. The first number represents the participant's total countries less any credits given for deleted countries. The second number shown represents the total D.X.C.C. credits given, including deleted countries. Where totals are the same, listings will be alphabetical by call sign.

Credits for new members and those whose totals have been amended are also shown.

PHONE

VK5MS	315/338	VK5AB	298/314
VK3AHO	312/326	VK4FJ	282/301
VK6RU	307/332	VK4TY	275/278
VK6MK	304/323	VK3TL	271/277
VK2JZ	303/320	VK2AAK	268/273
VK4HR	303/321	VK4KS	264/279

New Members:

Cert. No. 88	VK3JW	153/154
,, ,, 89	VK3OR	102/102
,, ,, 90	VK1VP	115/115

Amendments:

VK4DO	205/217	VK4PX	172/173
VK3ZE	194/197	VK4UC	107/107

C.W.

VK2QL	300/322	VK3YL	266/283
VK3AHQ	292/306	VK3ARX	266/275
VK3CX	289/312	VK6RU	266/289
VK4FJ	289/313	VK3NC	264/286
VK2AGH	282/296	VK3XB	263/277
VK4HR	276/299	VK2APK	260/268

Amendments:

VK3TL	255/260	VK4KS	131/137
VK4UC	167/168	VK4PX	101/105

OPEN

VK2AGH	311/331	VK4TY	301/315
VK4HR	309/333	VK4FJ	296/320
VK6RU	309/334	VK3ARX	289/298
VK6MK	305/324	VK3TL	287/293
VK2VN	304/321	VK3XB	286/274
VK2EO	302/325	VK2APK	282/292

New Member:

Cert. No. 113 VK3AMK 139/139

Amendments:

VK4KS	272/291	VK4UC	202/203
VK4DO	228/246	VK4PX	194/199

D.X.C.C. members will notice that nearly all scores have been amended this month. Please refer to this month's Federal Awards Notes for information relating to additions and deletions.

*AEGIS

* Registered Trade Mark

INSTRUMENT KNOBS

Just 4 of our wide range of bakelite and metal knobs

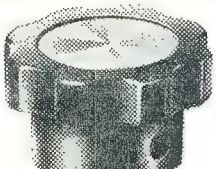

MV3/R
Black with silver insert, brass bush bored for 1/4" shaft and 2 grub screws at 90°. 1 1/8" diam. x 5/8" high.

Available everywhere. Write for detailed, illustrated leaflet and prices

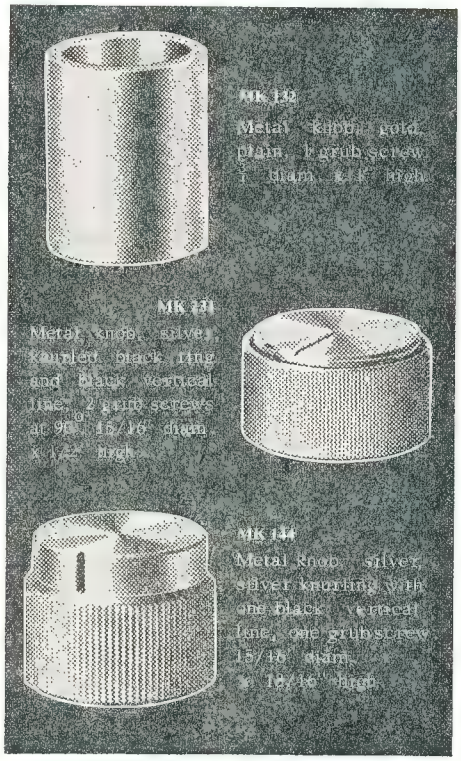

AEGIS PTY. LTD.

347 Darebin Rd., Thornbury, Vic., 3071.
P.O. BOX 49 Thornbury, Vic., 3071
Phones: 49 1017, 49 6792

PREDICTION CHARTS FOR NOVEMBER 1968

(Prediction Charts by courtesy of Ionospheric Prediction Service)

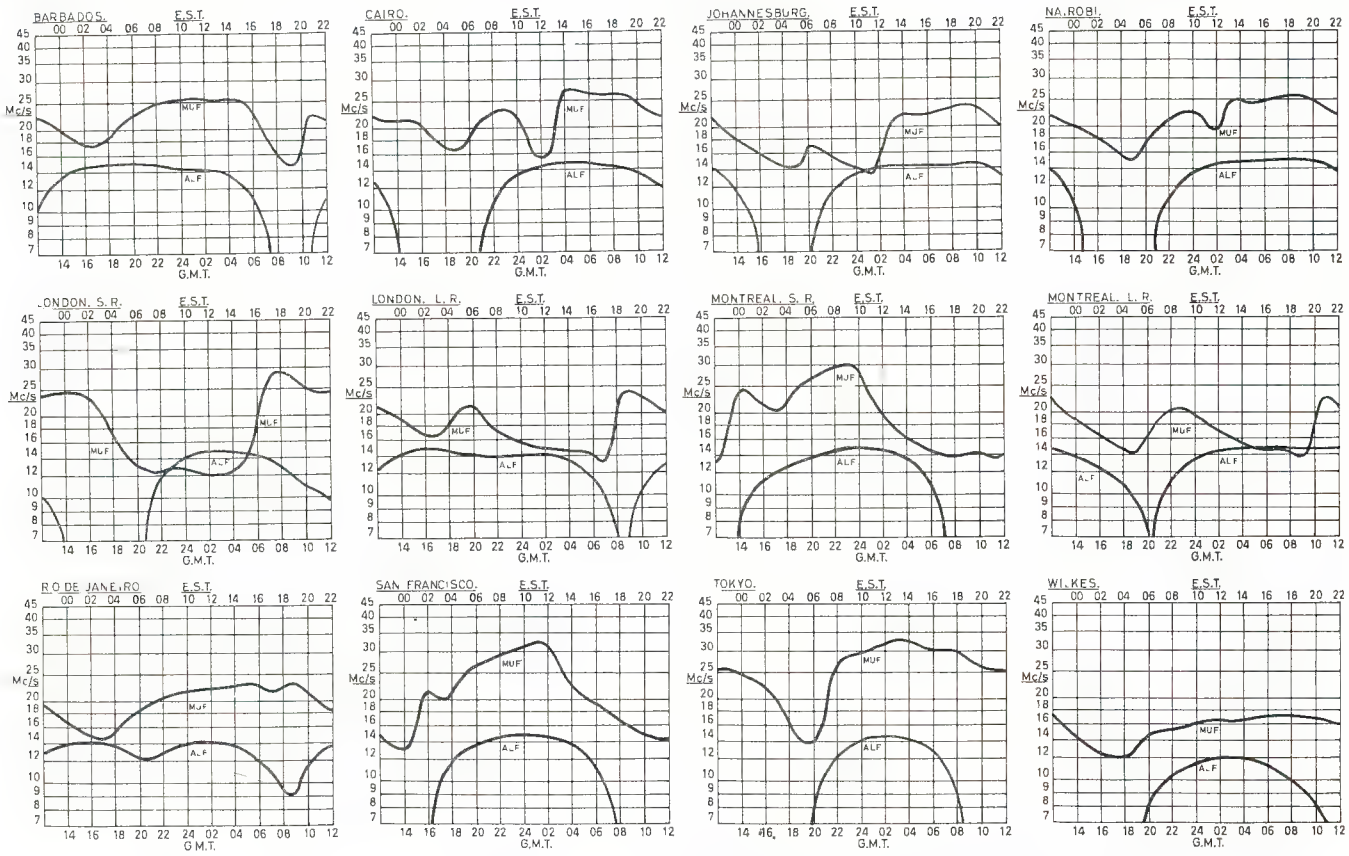

AUSTRALIAN RADIO AMATEUR

CALL BOOK

1968-69 EDITION

NOW AVAILABLE!

75 Cents, from your usual Supplier

NORMAN BROS.

for

GRAPH PAPER

GRAPH PAPERS AVAILABLE INCLUDE—

Standard Linear Scale — Semi Logarithmic Scale — Logarithmic Scale
"Z" Charts — Calendar and Time Scale — Reactance-Frequency Graph
Radio Receiver Performance Graph — Polar Graph — Electronic Scales

NORMAN BROS. PTY. LTD.

60 Elizabeth St., Melbourne, 101 Bourke St., 405 Bourke St., 399 Little Collins St., 270 Swanston St., Northland Shopping Centre, Preston.

Telephone 63-6221, 63-4535

• INDUSTRY • COMMERCE • RESEARCH • PLANNING

PROJECT—SOLID STATE TRANSCEIVER

PART ONE

H. L. HEPBURN, VK3AFQ, and K. C. NISBET,† VK3AKK*

PROLOGUE

In this series of articles, which will be spread over the next five or six issues, it is proposed to describe a series of transistorised modules which can be used to build up anything between a simple detector/audio system and a multiband s.s.b. transceiver.

Unlike a lot of projects which seem somehow to evolve, that to be described was started by the writers nearly twelve months ago with some very clear objectives in mind.

After the original "Moorabbin" receiver project in 1966, and the series of h.f. and v.h.f. converters which followed, it was apparent that the production of kits for transistorised equipment was something that was wanted and the decision was taken to aim for a much more comprehensive and ambitious target—a multiband s.s.b. transceiver which would equal—or even better—anything currently available over the counter. Yet somehow it had to avoid the large outlay of hard earned cash which is usually associated with going "commercial".

The design had not only to be technically advanced, but the product had to be capable of being "kitted" and each module had to be sufficient in itself so that it could be used for purposes other than that for which it was primarily designed. It also had to be simple to construct and to use parts which were available in Australia. It is our belief that the project to be described meets all these objectives.

GENERAL

Fig. 1 is the block schematic of the complete equipment. Each function is numbered and these numbers are used in the description that follows. Note that each block does not necessarily indicate a separate printed circuit board since in some cases several functions are combined on one board.

Let us start by assuming that one wishes to build a simple 80 metre receiver capable of doing a first class job of receiving sideband. The **minimum** number of functions that **must** be employed are:—

(a) Mixer	Function	2,	Fig.	1
(b) Filter	,,	3	,,	1
(c) I.F. Amp.	,,	4	,,	1
(d) Prod. det.	,,	5	,,	1
(e) Local osc.	,,	13	,,	1
(f) B.F.O. .	,,	7	,,	1
(g) Audio output	,,	8	,,	1

If an i.f. of 9 Mc. is chosen then the v.f.o. must cover 5-5.5 Mc. in order to cover a signal frequency range of 3.5-4.0 Mc.

Using the same v.f.o. the 14.0-14.5 Mc. band can be covered simply by adding another set of coils in the signal frequency part of the mixer. The band will tune the other way round, but this may be no real drawback.

* 4 Elizabeth Street, East Brighton, Vic., 3187.
† 25 Thames Avenue, Springvale, Vic., 3171.

Usually on the higher frequencies it is desirable to have some sort of r.f. amplification—even if only to confer a low noise characteristic and provide some additional signal frequency selectivity. Thus adding function No. 1 at a later stage will achieve these objectives.

To extend to other signal frequency ranges, several courses of action are possible:

i. A basic tuning range (say 3.5-4.0 Mc.) can be used and other signal frequencies "converted" to this tuneable range by the addition of crystal locked converters. This is the method which was used in the original "Moorabbin" project. However, the need to get the selective filter as close as possible to the antenna is not met by this system.

Thus the later addition of function 12 and 14 in Fig. 1 enables the basic one or two band receiver to be made into a multiband affair. Note that the additional bands added need not be on Amateur frequencies. Note, too, that all bands will tune at the same rate, will have the same calibration and the same stability. By proper choice of the injection frequency the correct sideband can be automatically selected.

To transform either the single band or multiband receiver into a transceiver it is necessary to add other functions. In Fig. 1 they are functions 15, 16, 17, 18 and 19. This would give an output of around the 1 watt peak. Function 20, the p.a., can be added to raise the output to the 15-20 watt peak level or the lower output used to drive a conventional valve linear.

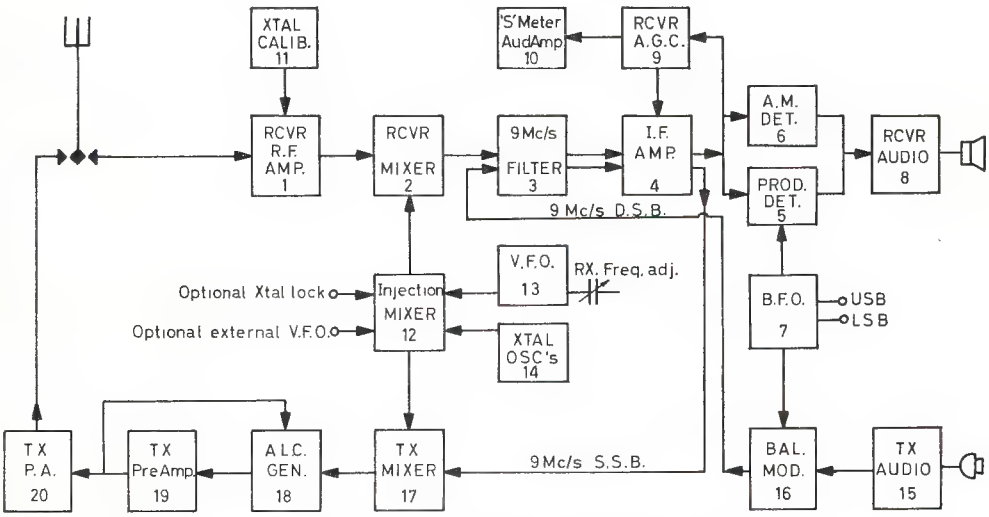

FIG. 1. - TRANSISTOR-4 BAND-TRANSCEIVER - BLOCK DIAGRAM.

ii. A multi-frequency v.f.o. can be used which is switched to cover the required injection frequency range for each band. Apart from the difficulty of constructing a really stable switched v.f.o. on frequencies between 5 Mc. and 21 Mc., the system does not simply allow the use of external v.f.o's for split frequency working, or external crystal oscillators for spot frequency working.

iii. The output of a single range v.f.o. can be mixed with that from a crystal oscillator to produce the required mixer injection frequency. Provided that precautions are taken to depress unwanted products in the output of the injection mixer, this system is to be preferred since it is very flexible and allows additional signal frequency ranges to be covered as required without remaking the v.f.o.

Audio from the tx audio function (15) is mixed with the output of the existing receiver b.f.o. (7) in a balanced modulator (16) to give d.s.b. output on 9 Mc. This d.s.b. signal is then passed through the existing filter (3) to remove the unwanted sideband and amplified in the existing receiver i.f. amplifier (4). The amplified s.s.b. output on 9 Mc. is then mixed in the transmitter mixer (17) with output from either the v.f.o. (13) or the injection chain (12, 13, 14) to give s.s.b. output on the required signal frequency. The signal frequency output is amplified to the 1 watt level in the transmitter pre-amplifier (19) and, if required, further amplified to the 15-20 watt level in the transmitter p.a. (20).

Since the v.f.o. and b.f.o. are common to both receiver and transmitter, a transmitted signal will be on exactly the same frequency as that being received. It will also be on the same sideband.

Other features which can be added (and some are incorporated in the finished design) are rx a.g.c., tx a.l.c., S meter, external v.f.o., external crystal lock, rx calibrator or a.m. noise limiter. A good simple noise limiter has not yet been found by the writers.

Thus the total design makes it possible to start with a simple basic receiver, get it going on one band and add modules as time and money permit to expand, first to a multiband receiver and then to a multiband transceiver.

It is further possible to use the modules to "tailor" a specific requirement. For example, by using a simple crystal oscillator in place of the injection chain (12, 13, 14) one could produce a single fixed frequency receiver, or transmitter, or transceiver for W.I.C.E.N. or other net use. Provision has been made for such external injection as well as for a second v.f.o. to permit split frequency working.

Table 1 shows some of the possibilities inherent in the modular approach by listing various "end products" and the functions necessary to achieve them. The table is by no means complete and (within reason) the number of possibilities is limited only by the imagination. The writers will be pleased to talk over other possible combinations with anyone interested.

FEATURES

Frequency ranges:
- (i) 1.8 to 2.3 Mc.
- (ii) 3.5 to 4.0 Mc.
- (iii) 7.0 to 7.5 Mc.
- (iv) 14.0 to 14.5 Mc.
- (v) Provision made for optional addition of 21.0-21.5, 28.5-29.0 Mc. or any other two 0.5 Mc. bands.

I.f. Frequency: 9.0 Mc.
V.f.o. range: 5.0 to 5.5 Mc.
Tuning: 0.5 Mc. per band. All bands tune in the same direction at the same rate.
Generator type: Filter uses a Pye 9-0A crystal filter.
Tx output: 15 watts p.e.p. into 50 ohms.
Sideband selection: Automatic. Other sideband selectable.
Power supply: 12v. d.c. (or 230v. a.c. with suitable power pack).
Rx audio output: 1.3 watts into 8 ohms.
Rx sensitivity: Better than 0.5 microvolts, 30% a.m. modulated.
Rx noise figure: Better than 3 db. at a bandwidth of 2.8 Kc.
Drift: Better than 50 cycles per hour.
Other features:
- (i) Provision for external v.f.o.
- (ii) Provision for crystal lock.
- (iii) A.m. noise limiter.
- (iv) Uses Eddystone dial but will accept less exotic ones.
- (v) Rx vernier tuning.

End Product	Function Used
Four-band receiver	1, 2, 3, 4, 5, 6, 7, 8, 9, 10, 12, 13, 14
3.5 Mc. receiver	1, 2, 13, 3, 4, 5, 7, 8, 9
3.5 Mc. transmitter/receiver ..	1, 2, 3, 4, 5, 8, 9, 7, 13, 15, 16, 17, 19, 20
3.5/14 Mc. transmitter ..	15, 16, 7, 3, 4, 17, 13, 19, 20
Spot frequency receiver .	1, 2, 14, 3, 4, 5, 7, 8, 9, 10
"Front end" for an existing rx	1, 2, 12, 13, 14
9 Mc. s.s.b. generator	15, 16, 7, 3, 4
QRP c.w. transmitter (v.f.o.) ..	12, 13, 14, 17, 19 (+ 20)
"Q5er" back end	5, 6, 8
A.m. modulator pre-amp.	15

Table 1.—Function Combinations.

The grouping of functions on to printed circuit boards is as follows:
- (a) Rx r.f. amplifiers and mixers—Functions 1, 2.
- (b) 9 Mc. filter unit—Function 3.
- (c) Rx i.f. amplifier and a.g.c.—Functions 4, 9.
- (d) A.m. detector, a.m. N/L, prod. detector—Functions 5, 6.
- (e) Rx audio, squelch, C/O relay—Function 8.
- (f) V.f.o. (in die cast metal box)—Function 13.
- (g) Injection oscillators and mixers—Functions 12, 14.
- (h) Tx audio—Function 15.
- (i) B.f.o./balanced modulator—Functions 7, 16.
- (j) Tx mixers, pre-amplifiers and a.l.c.—Functions 17, 18, 19.
- (k) Tx p.a.—Function 20.
- (l) Rx crystal calibrator—Function 11.

Having covered the general concept of the design, and shown some of the possibilities inherent in it, the description will now become more specific. Comments in all cases refer to the completed unit.

With the exception of the v.f.o. and tx p.a., all printed circuit boards are 4½" x 2½" and use a glass epoxy substrate. ⅜" is left uncoated at each end for mounting purposes.

The completed unit is contained in a metal cabinet approximately 15" x 8" x 11" deep. If sufficient interest is shown, consideration will be given to organising a supply of the metalwork.

Wide use has been made in the circuitry of Motorola MPF102 single gate FETs and R.C.A. 3N140 dual gate FETs. These are obtainable from Cannon Electric and Radio Parts respectively. Other transistors used are either Mullard or Fairchild. All other components are standard items and can be obtained in Australia.

The specification of an **output** power of 15 watts peak may cause some comment. It is certainly worthy of some.

In Australia, although sideband transmitters are rated on output, there are still a very large number of Amateurs who still use the older d.c. input terminology. The reasons for this are understandable since most of the commercial equipment sold in this country is of either American or Japanese origin. Both of these countries use a d.c. input method of rating sideband transmitters and the specifications (and advertising!) refer only to d.c. input. Depending on the particular mode of operation in which the p.a. is run, the peak output of commercial gear may be as low as 30% of the d.c. input. Thus a transmitter rated at 100 watts peak d.c. input may well only give 30-35 watts of peak r.f. at the antenna.

Thus the 15 watts peak output capability of the present design is not insignificant and is about half the power one would get from valve equipment using a single tube in the p.a.

It is certainly possible to get more than 15 watts from a single transistor, but for multiband operation (as distinct from single spot frequency operation) the problems of matching a transistor output impedance of a quarter ohm or so into a 50 ohm antenna are rather frightening. An attempt to work out the circuit constants (and switching) for a four-band h.f. rig giving 50 watts of output and running off a 12 volt rail will soon indicate the size of the problem.

The 15 watts output level was finally chosen because—
- (a) It simplifies matching problems.
- (b) It is quite adequate for "barefoot" operation.
- (c) It is more than sufficient to drive an AB or AB2 valve linear to the full allowance of 400 watts peak output.
- (d) It allows safe operation of the p.a. transistor even with the antenna disconnected.
- (e) It can readily be obtained from available transistors off a 12 volt rail.
- (f) It is — in general — compatible with the concept of portable equipment.

DESCRIPTION OF MODULES

Receiver Audio Module
(Function 8, Fig. 1)

The audio end of any transistorised equipment is—on the face of it—the simplest.

However, quite a number of circuits were tried before settling for that shown in Fig. 2. This circuit is essentially the one described in the Fairchild Applications Brief No. A002, the only additions being the transistor associated with the base circuit of the AY1121 driver. Full acknowledgment is made to Fairchild for the use of this circuit.

Under quiescent conditions the emitters of the output pair are held at approximately half rail potential. On positive excursions of the input signal the AY6108 conducts and drives the speaker through the 250 uF. capacitor. The AY6109 drives it on negative excursions. At very small signal levels an appreciable portion of the power delivered to the load passes through the 560 ohm resistor. The AY1120 and AY1121 form a high gain direct coupled voltage amplifier to drive the output pair. 100% feedback through the 2.2K resistor accurately establishes the quiescent point of the output pair.

The 470 ohm resistor between the AY6108/AY6109 emitters and ground reduces cross over distortion at low

signal levels, while the 150 ohm resistor in the AY1121 emitter/ground path establises the sensitivity of the unit.

The 0.1 uF. condenser across the supply rails prevents oscillation if the impedance of the supply is excessively high (e.g. dud batteries).

The unit can be operated at rail voltages of between 9 and 20 volts without modification although of course the power output will also vary.

At 12 volts and using an 8 ohm speaker load, the output is 1.3 watts for an input voltage swing of 1.0 volt peak to peak. No heat sinking is required for the output pair under these conditions, but if the rail voltage is raised to 20 volts to take advantage of the 3.5 watts of output, then available heat sinks are necessary.

The transistor in the base circuit of the AY1121 is an optional feature. It is used in the completed unit as a muting switch.

9 Mc. Filter Module
(Function 3, Fig. 1)

The performance of the Pye 9-0A crystal filter is—for its price—the best obtainable on the Australian market. Other 9 Mc. filters are obtainable which have marginally better performance, but they are usually much more expensive and, being imported, are subject to supply variations. Accordingly, the decision was made to use a 9 Mc. i.f./s.s.b. generator system which used the Pye 9-0A.

Fig. 3 gives the circuit diagram and, with one small exception, is as recommended by Pye for use with their filter.

The exception is the use of fixed capacitors of 120 pF. and 100 pF. at the input and output of the filter instead of the part fixed/part variable capacity recommended by Pye. There was no discernable difference in the performance of the unit due to this change.

The input amplifier (BF115) gives some gain but its main purpose is to match the input to the 150 ohms presented by the filter. The output transistor (also a BF115) is used as an emitter follower to give the board a low output impedance. The RFC and associated 0.01 uF. capacitors in the +12 volt line are to prevent coupling between input and output via the feed line. No adjustments of any sort are called for and, providing the components are mounted correctly, it will work first time.

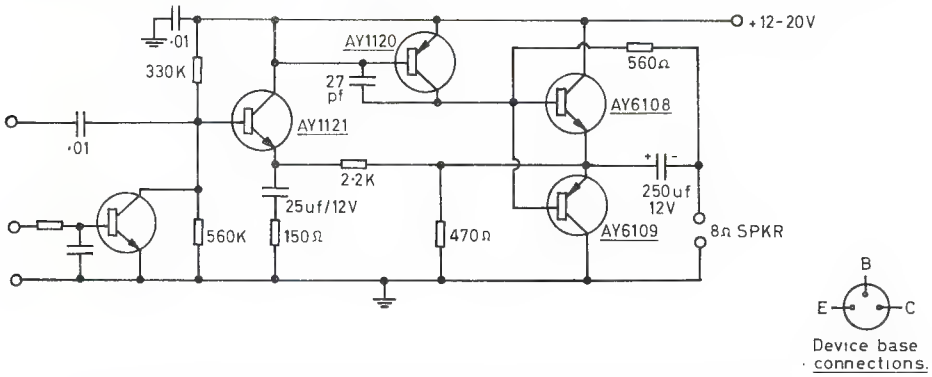

FIG. 2.- 4-BAND TRANSISTOR TRANSCEIVER - AUDIO SECTION-RECEIVER.

NOTE: The .01 uF. capacitor across the supply rail in Fig. 2 should read 0.1 uF.

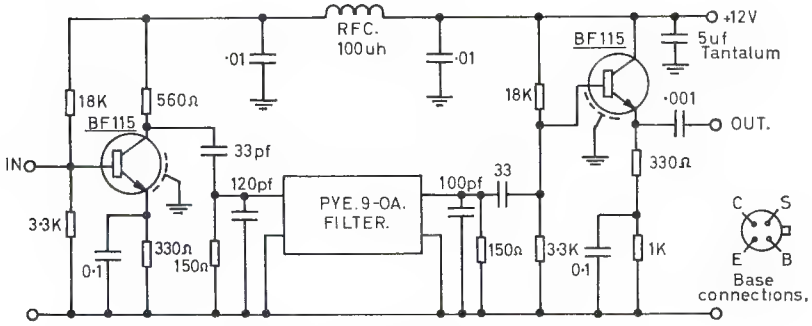

FIG. 3.- 4 BAND TRANSISTOR TRANSCEIVER - FILTER SECTION.

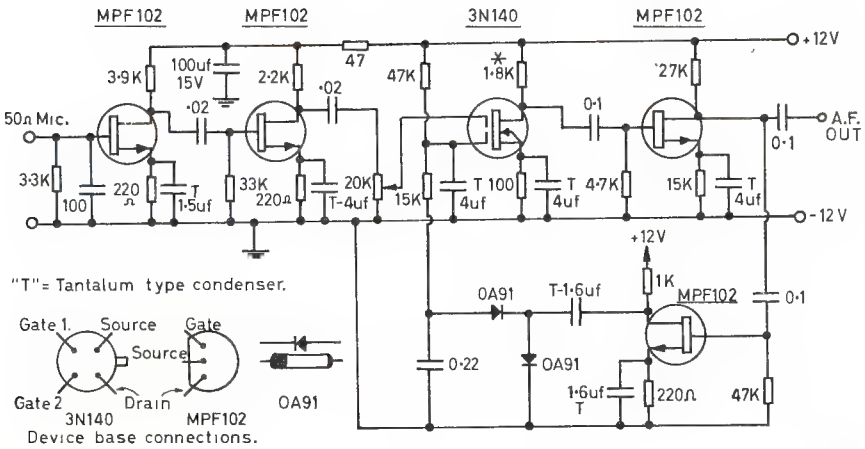

FIG. 4.- 4 BAND TRANSISTOR TRANSCEIVER - TX AUDIO SECTION.

Tx Audio Module
(Function 15, Fig. 1)

This module includes not only the voltage amplification required but also incorporates pre-set automatic audio level control. To a certain extent this latter feature achieves the same end as the more conventional r.f. derived a.l.c. Fig. 1 indicates that provision has been made for both forms in the overall design. Fig. 4 gives the circuit diagram.

A two-stage RC coupled pre-amplifier using Motorola MPF102s takes input from a 50 ohm dynamic microphone. The amplified signal is fed to gate 1 of an R.C.A. 3N140 dual gate FET. Output from the 3N140 is again amplified in a third MPF102 whose output is split two ways. One output goes to the balanced modulator (to be described) while the second output is again amplified and then rectified to give a control voltage which is applied to gate 2 of the 3N140.

The only critical adjustment on the board is the 1.8K resistor in the drain of the 3N140 and the value of this resistor may have to be adjusted in extreme cases.

The value of 1.8K shown has proved satisfactory on four developmental models. When the correct value is used for the drain resistor of the 3N140 the drain voltage under no signal conditions should be 4 volts. This voltage should rise to 8 volts at maximum speech input. At average input levels the voltage should be around 6 volts.

The 20K audio level control is mounted external to the board and connecting pins are provided on the board to make the necessary lead anchor points. These pins also provide connecting points if an external microphone pre-amplifier (mounted in the microphone case) is used. It is the writers' opinion that such a case mounted pre-amplifier is most preferable to prevent r.f. getting into the audio system. However, in this

design lack of knowledge of the type of microphone that would be used prevented this being done. For those who wish to fit a pre-amplifier in the microphone case the circuitry of the first two stages in Fig. 4 are perfectly applicable.

Two pairs of connecting pins are provided on the p.c.b. as anchor points for p.t.t. connections.

AVAILABILITY

As for all the designs published in "A.R." over the past two years, provision is being made to make available full kits of parts, printed circuit boards or p.c.b's plus full instructions and diagrams.

Twelve or so boards are involved and in the case of the finished job the same board has been used several times. A four-band transceiver for example uses 21 boards in all.

The aim has been to keep the **average** cost of each board to around $12-$15 but of course this must vary from module to module according to its complexity.

The receiver audio kit will cost $12 less speaker.

The transmitter audio kit will cost $25 complete.

The filter kit will cost $30 complete.

All of the above prices include all components, p.c.b., diagrams and instructions.

P.c.b's alone will be $2 each, while P.c.b's plus diagrams and instructions will be $3.

Anyone interested in taking part in this project is invited to write to one of the writers—3AFQ—at 4 Elizabeth St., East Brighton, Vic., 3187, for additional information on supplies of kits or p.c.b's.

(To be continued)

Magazine Review

"BREAK IN"—JUNE 1968

A Double Sideband Transmitter: Five band d.s.b. rig beginning with a Franklin v.f.o. and having a pair of 6DQ6s in the final. Uses disposals parts and tubes readily available in Australia.

Oscilloscope Notes: Information on using the VCR97 disposals c.r.t. in a simple oscilloscope suitable for checking s.s.b. transmitters, etc.

The Minicheck: A small device which turns an ohmmeter into a transistor checker and permits lead identification, etc.

Integrated Circuits: General dissertation on purpose and manufacture of these devices and the promise they hold out for more sophisticated and less expensive consumer products.

B/C Converter for 80 Metre Transceivers: Describes a simple one transistor converter to enable broadcast stations to be received on an 80 metre transceiver.

"BREAK IN"—JULY 1968

Four-Band S.s.b. Transmitter: A phasing rig beginning with 9 Mc. generator and followed by the usual stages to a TT21 final, uses many disposals components and readily available tubes, etc. For a power input of around 150 watts d.c. peak. The unit has built-in v.o.x. and a.l.c. all in one cabinet.

Hertz Ccycles and Seconds: Describes the origin of the term "Hertz" for "cycles per second" and explains the relationships between frequency and time and the different time scales in use throughout the world. A good article of general interest without diagrams.

The Lazy L.A.D.S.: A design for a light actuated dip switch. Simple circuitry using three transistors and an L.D.R.

Wind Speed Indicator, from parts around the Shack: Short article describing how ZL1IM built himself a windspeed indicator from a small permag. motor and a multimeter.

"BREAK IN"—AUGUST 1968

Grinding and Etching Crystals: Cliff Dixon, ZL2FT, and P. J. Rogers, ZL-3NH. Two short articles, one on each of these subjects by the above authors, grouped by the editor to acquaint Amateurs with the crystal working process, by which crystals can be adjusted to frequency.

An Eight-Valve QRP S.s.b. Transceiver: From a lattice filter made from FT241 crystals operating in the normal i.f. range to a 6AG7 used as the transmitter final and receiver a.f. stage on 80 mx. A small handy rig for car, field day or home QTH.

Oscilloscope Notes, No. 2: Continuing the article commenced in June "Break In".

Effects of Stray Capacitance on L and C Measurements: Explains how to make reasonably accurate measurements of L and C using simple equipment and how "strays" affect accuracy.

Transistor Breadboard and Power Supply: An experimenter's approach to solid state techniques.

Linear Amp. for the D.s.b. Tx: Describes a linear designed for the d.s.b. tx described in June "Break In" which increases the input power to about the N.Z. legal limit of 300w. d.c. peak using an 813 or a pair of TT21s. E.h.t. about 2,500v. for 813 and 1,100v. for TT21s.

DURALUMIN, ALUMINIUM ALLOY TUBING

IDEAL FOR BEAM AERIALS AND T.V.

★ LIGHT ★ STRONG ★ NON-CORROSIVE

STOCKS NOW AVAILABLE FOR IMMEDIATE DELIVERY

ALL DIAMETERS—¼" TO 3"

Price List on Request

STOCKISTS OF SHEETS—ALL SIZES AND GAUGES

GUNNERSEN ALLEN METALS PTY. LTD.

SALMON STREET,
PORT MELBOURNE, VIC.
Phone: 64-3351 (10 lines)
Telegrams: "Metals," Melb.

ADELAIDE GAM MELBOURNE

HANSON ROAD,
WINGFIELD, S.A.
Phone: 45-6021 (4 lines)
Telegrams: "Metals," Adel.

CHOOSE THE BEST—IT COSTS NO MORE

OTL

RESIN CORE SOLDERS
for reliable connections

O. T. LEMPRIERE & CO. LTD. Head Office: 31-41 Bowden St., Alexandria, N.S.W., 2015
and at Melbourne — Brisbane — Adelaide — Perth — Newcastle

Repeater Technical Group Meeting

Convened by the Wireless Institute of Australia, this meeting was held at the Scout Hall, Bandianna (near Wodonga), Vic., over the week-end of 21st and 22nd September, 1968. The following minutes represent, I believe, an accurate record of the resolutions adopted at the meeting.

Whilst it has been impossible to record the many technical sidelights leading to the formulation of these proposals, it should be understood that the recommendations reflect the depth of technical discussion which took place in and outside the limits of this meeting.

The proposals have not been agreed to lightly, and embody an awareness of present and projected requirements compatible with existing equipment and the technical knowledge of those who will have to do the work.

It was unfortunate that the VK6 Division was unable to personally express a view, but as mentioned in the minutes, they must feel free to avail themselves of help to explain any angle not clear or not adequately dealt with in depth in this reporting.

The decisions of the meeting are, of course, not binding on Divisions. However, the Federal Executive is now preparing a series of policy motions which will be sent to Divisions in the near future. If the Divisions decide to vote in favour of these motions, which will represent the substance of the decisions reached at Wodonga, then the Divisions will formally adopt the conclusions of the meeting as Federal Policy.

SATURDAY AFTERNOON

Chairman: M. Owen, VK3KI, Federal Vice-President, W.I.A.

Secretary: P. Williams, VK3IZ, Federal Secretary, W.I.A.

Apologies received from Federal President, J. Battrick, VK3OR; VK6 Division.

Present (and status):—

- Tim Mills, VK2ZTM, VK2 Councillor and V.h.f. Group.
- Andrew Davis, VK1DA, Canberra R.S.
- John Gardiner, VK1ZOO, Canberra R.S.
- Paul Smith, VK2ZSA, V.h.f. Group.
- Andrew Dean, VK2ZTO, V.h.f. Group.
- Geoff. Craike, VK2ZJT, VK4 Observer.
- Jim Mayland, VK3AJM, N.E. Zone.
- Bob Knaggs, VK3AJN, Wangaratta R.C., N.E. Zone.
- Les Jenkins, VK3ZBJ, Australis.
- George Crisp, VK3ZJQ, Vic. Div. Tech. Rep.
- Ken Nesbit, VK3AKK, Vic. Div. Tech. Rep.
- Dr. D. Blackman, VK3TX, VK3 Federal Councillor.
- Don Haberecht, VK2RS, S.W. Zone Rep.
- Art. Phibbs, VK2EU, S.W. Zone Rep.
- John Rufus, VK2ZJQ, V.h.f. Group.
- Chris. Jones, VK2ZDD, VK2 V.h.f. Translator.
- Peter Dowde, VK7PD, VK7 Div., VK7 Repeater.
- Ian MacKenzie, VK2ZIM, VK2 W.I.C.E.N., Orange R.C.
- Pierce Healy, VK2APQ, VK2 Fed. Councillor.
- Arthur Lock, VK3AUL, N.E. Zone.
- Geoff Taylor, VK5TY, VK5 Fed. Councillor.
- Col. Christenson, VK2BCC.
- Jim Linden, VK3AXB, N.E. Zone.

The meeting opened at 1.35 p.m. and representatives were welcomed by A. Lock, VK3AUL. The Chairman thanked VK2ZDD for the work in initiating the meeting.

The Chairman explained the role of F.E. which is merely to co-ordinate the activities throughout the country. Minutes of this meeting will be circulated to all Divisions and will show the origins of any resolution.

The Chairman then asked that the form of the meeting be approved.—Unanimous.

The Chairman then gave the background to the P.M.G. negotiations, indicating that the Department and Mr. Carroll had adopted a liberal view, but emphasised that there should be standardisation.

P. Healy, VK2APQ, asked whether formal rules of debate applied and the Chairman indicated that this would not be so—every representative would be given the opportunity to present his point of view.

The Chairman then called for the status of each Division with respect to repeater development and future propositions.

VK2APQ FOR N.S.W.

Repeaters were discussed at Council on 16th August and it was resolved that standardisation be sought with Chris. Jones, VK2ZDD, as co-ordinator. VK2 Division had stated that VK2APQ would be general spokesman, with VK2ZTM representing v.h.f. interests and VK2ZIM representing W.I.C.E.N.

Mr. Healy also stated that there were problems of distance in N.S.W., but on evidence to date were in general agreement with other Divisions.

VK3TX FOR VICTORIA

Dr. D. Blackman reported on the problems with the presently used repeater of Australis origin these were mainly technical and involved coverage. He also stated that over 100 stations were using the present system, but was concerned with the longer term problem of linking country and intrastate users.

VK2ZJT FOR QUEENSLAND

Mr. Craike advised that Amateurs in this State wished to abide by the systems created by their neighbours, viz. VK2.

VK5TY FOR SOUTH AUSTRALIA

Mr. Taylor said that experimental operation had been allowed with a site on the Adelaide hills.

VK7PD FOR TASMANIA

Mr. Dowde, representing two committees from the north and south, stated that there were some amendments to the previously circulated letter. Their need for repeaters came from the requirements of general communications between north and south and the desire to provide intrastate communications.

He felt that the meeting should decide frequencies, made and suggested operating procedures, with different frequencies for varied areas.

Technically, operation can take place on either side of existing channels, with 100 kc. separation feasible.

WESTERN AUSTRALIA
(A Taped Telex by VK6KM)

This Division felt that:—

1. Standardisation should be universal.
2. Federal Executive should be involved in the discussion.
3. Separation should be 1 Mc.
4. The frequencies chosen should be arrived at after close engineering study and be presented to all Divisions after the meeting. There should be no rushing into a compromise.

He also reported that approximately ten stations were operating in W.A. on 146 Mc.

VK1DA FOR CANBERRA R.S.

Mr. Davis agreed to the general outlines as presented by the N.S.W. Division.

TECHNICAL DISCUSSION

In opening the technical discussion, C. Jones, VK2ZDD, noted that the following points had to be resolved:—

1. Frequency allocations—the spacing of allocations and the deviation to be employed.
2. Whether the input was on the high or low side of the band.
3. To determine the necessary frequency separation and find minimum and maximum limits of this separation.

Subsequent discussion indicated that two types of repeater relays should be considered: (1) A simplex repeater where a signal was repeated within a band, and (2) A translator, where a signal was heterodyned to another frequency or usually to another band.

VK3AKK pointed out that the existing Australis system was not designed for general communication and could therefore be designated "experimental".

VK2ZDD, in answer to a query on coverage, said that service or simplex repeaters could be linked and this system could carry all traffic. This, however, was a domestic problem for individual States to solve.

VK3TX drew the attention of the meeting to the question of frequency separation and suggested that 1 Mc. would suffice.

However, VK2ZIM indicated that 240 Kc. channel separation had been used and that 500 Kc. still falls within manufacturers tolerances of readily available surplus equipment.

VK3AKK agreed with this statement up to a point, but asked how many groups would be able to provide the physical separation of transmitter and receiver. He felt there would be little degradation of performance if the separation was 600 or 700 Kc.

VK3AJM asked if equipment can be put on the one mast with this separation and receive technical assistance when necessary.

VK5TY said that 146 Kc. has been used with no desensitisation but co-axial filters have helped the situation.

VK3NS pointed out that conservation of frequencies was a prime requirement and stated that between 145.6 and 146.9 Mc. twelve channels could be accommodated, although it was pointed out that there could be no usage of existing net frequencies.

With seeming agreement of all representatives on the separation of input and output frequencies, the Chairman called for a motion.

1.1 **Moved** VK2ZDD: "That the separation of input and output frequencies for service translators shall not exceed 500 Kc." **Seconded** VK3AUL.

In speaking to the motion, VK3ZBJ was opposed to it on the grounds that it was simple for operators to take steps to increase the bandwidth with no ill effects. With input Q of 300, circuits can be loaded to accept a greater bandwidth.

VK5TY offered an **amendment** to add the words after "500 Kc." "from the most further removed corresponding mode on Channels A, B and C." **Seconded** VK3AKK.

Further discussion indicated that there was some confusion as to the meaning of service translators. It was also apparent that the relationship of channel separation for repeaters, the frequencies they would use, and their separation from existing net frequencies had not been clearly defined in the minds of delegates.

The Chairman thought that time should be allowed for a clarification of these points.

VK3ZBJ **moved**, VK3ZJQ **seconded**, that discussion on motion and amendment be deferred until the situation was clarified.—**Carried unanimously.**

After a 15-minute recess, the definitions of a Service and Experimental Translator was put to the chair.

1.2A. **Moved** VK3ZBJ, **seconded** VK2ZDD, "That a Service Translator is a translator designed to be used by current mobile equipment using Channels A, B and C and with the intention of extending the range of similar operation."—**Carried unanimously.**

1.2B. "An Experimental Translator is a translator for experimental purposes for use by specially designed equipment and not intended to provide a use for normal operation."

Discussion on the deferred motion and the proposed amendment resumed, and with the approval of his seconder, VK5TY withdrew the amendment and VK2ZDD withdrew the motion with approval of seconder.

1.3. Subsequently, it was **moved** VK3AKK "That Service Translator input and output frequencies shall be between and including 145.6 and 146.4 Mc." Seconded VK2ZDD.

During discussion, it was apparent that allowance had not been made for future channels on a specific basis.

VK2ZDD stated that 100 Kc. separation is adequate for successive input and output frequencies, whilst maintaining the 500 Kc. separation between channelled inputs and outputs. In addition, 100 Kc. separation can be easily observed with a crystal calibrator. He therefore proposed that the following frequencies for Service Translators be accepted:—

(1)	Input—146.1 Mc.	Output—145.6 Mc.
(2)	,, 146.2* ,,	,, 145.7* ,,
(3)	,, 146.3* ,,	,, 145.8* ,,
(4)	,, 146.4 ,,	,, 145.9 ,,

VK3TX said that trouble would be caused to Channel C and the Australis Channel if the frequencies* were used.

However, VK2ZDD said that a service was already operating on one of these.

VK7PD had no objection and VK3TX asked

whether the two channels under question could be deleted from any motion.

VK2ZDD therefore proposed that Channels (2) and (3) be not listed as immediate priority Channels, although he felt that the occasion would soon arise when they would be used.

Motion 1.3 was withdrawn and it was subsequently **moved** VK3TX, **seconded** VK2ZDD:

1.4. "That the Primary Service Translator frequencies be 146.4 Mc. input and 145.9 Mc. output, and the second channel be 146.1 Mc. input and 145.6 Mc. output with the frequencies of 146.2 Mc. input and 145.7 Mc. output, and 146.3 Mc. input and 145.8 Mc. output, reserved for future expansion, subject to national agreement of Service Translator facilities."—**Carried unanimously.**

It was also agreed that deviation used be compatible with existing facilities.

VK2ZDD raised the question of national co-ordination of a simplex channel. After little discussion, it was **moved** VK2ZDD, **seconded** VK2ZIM:

1.5. "That the Primary Simplex Frequency be 146.00 Mc. and that new operators be encouraged to commence on this frequency."—**Carried unanimously.**

1.6. **Moved** VK3AKK, **seconded** VK3ZBJ, "That 438 Mc. be accepted as a standard f.m. net frequency."—**Carried unanimously.**

On the subject of Experimental Repeaters, VK3ZBJ said that these can be set up by those who wished to cover greater distances.

As the work involved is experimental, this precludes the use of commercial equipment. He proposed the use of 145.76 Mc. input and 147.76 Mc. output with deviation of plus or minus 15 Kc.

VK2ZDD thought that there would be problems with other translator channels.

1.7. **Moved** VK3AKK, **seconded** VK3ZBJ, "That the frequencies of 145.76 Mc. in and 147.76 out, together with the frequencies of 420.739 Mc. in and 431.50 Mc. out with a deviation of plus or minus 15 Kc., be set aside for Experimental Translators on a national basis."—**Carried unanimously.**

Meeting then adjourned.

SUNDAY MORNING

The Chairman called for any further business and VK2ZDD suggested that it would be appropriate to consider a national net frequency for 6 metres.

1.8. Accordingly, **moved** by VK2ZDD, **seconded** VK3AKK, "That the national 6 metre f.m. net frequency shall be 52.525 Mc. though it is noted that it is not intended to preclude the use of 52.656 or 53.950 Mc. as alternative State channels."—**Carried unanimously.**

The following recommendations were also agreed to by the representatives:

1. Further discussions can be held on the linking of Interstate stations on 432 Mc. It will be desirable in the near future to suggest frequencies.
2. VK2ZDD suggested that it would be desirable to keep a national record of progress and problems during the establishment and running of these repeaters.

On the suggestion of VK3AXB asking that all Divisions form technical committees to assist with technical problems, VK3ZBJ continued by stating that State groups act in an advisory capacity and liaise with the Department.

1.9. **Moved** VK3TX, **seconded** VK3ZBJ: "That the VK2 Division act as the Secretariat for the co-ordination of v.h.f. net frequencies."—**Carried unanimously.**

VK7PD stated that his Division had asked that seven or eight channels be made available for Interstate working but felt that the agreements reached would be satisfactory. However in the light of experiment or necessity, he felt that it should be open for Divisions to submit plans to the VK2 Secretariat. The meeting agreed that this was the case, and the Secretariat agreed to co-oridnate all aspects of repeater installations. VK3AUL asked that if and when State repeater committees are formed, representation be allowed from country areas.

VK3TX, Federal Councillor, noted these remarks and stated that it was necessary that those people proposing to install a repeater should seek the guidance of their State committees. The matter would be discussed at State Council level.

The meeting also noted that where repeaters were proposed at State border areas, that the closest co-operation exist between the respective Divisions and technical committees and the Secretariat.

In conclusion, the Chairman thanked all those present for making the effort to attend this meeting. The presence of VK2APQ, VK3TX and VK5TY as Divisional Federal Councillors was particularly valuable, as well as the technical representatives from Divisions.

He stated that apart from circulating these minutes to all Divisions, notification would be given to Divisional Councils on those matters which could well become Institute policy.

He also thanked the VK6 Division for the comments which had been given due weight during the discussions and suggested that this Division write to VK2 for clarification on any technical points.

VK2ZDD thanked the Chairman and Secretary for their work and was appreciative of the presence of Federal Executive on this occasion.

VK3ZBJ, in his remarks, stated that he was very impressed with the calibre of the people present and felt that this augured well for future developments.

Finally, the Chairman thanked Arthur VK3AUL for his work in organising accommodation and the dinner.

The meeting was officially closed at 1005 hours, Sunday, 22nd September, 1968.

— . . . —

V.H.F. NOTES

Well it's news time again and still no reports from other States. If any Interstate correspondents have news for the Dec. issue and can get it to me before Thursday, 5th, I can include them on this page. January "A.R." notes should be in before 2nd Dec. And now some news on beacons:

VK5VF—144.800 Mc.
VK6VF—52.006, 145.000 and 432.590 Mc.
VK7VF—144.8 Mc.
ZE1JZA—144.016 and 432.048 Mc., both with 100 watts input 15 db. gain antennae and operate continuously.

Do you know of any other v.h.f. beacons? If so, please let me have full details so as the details can be published in Dec. "A.R."

—73, Cyril, VK3ZCK.

VICTORIA

The VK3 V.h.f. Group held its annual Convention in Bendigo over the week-end 12th and 13th Oct. We hope that all those who attended had a very enjoyable time. Thanks should go to the Bendigo group for their help and hard work that made the week-end successful.

6 Metres: Neville VK3ZPN and John VK3ZWL have been spending a large amount of their spare time during the winter months building tunable mobile transceivers for six metres, so that they can take their t.v.i. away from the QTH area and work the summer DX in peace. Robert VK3ZUE is active every week-end on a.m. with about 15w. and a beam and a ground plane, while Geoff VK3AMK has appeared again after an absence of quite some time. Jim VK3ZHF, now back from G-land, is active again and is often heard on both the a.m. and f.m. nets. He can also be found lower down the band with ample power from an 829B.

Yours truly has arranged several skeds with Ws and KH6s for the coming season, while a W6 reports that he has a **half mile** long rhombic beamed on Sydney. He transmits at 0700 E.A.S.T. using c.w. and one kilowatt and then listens for any VK call. Dates, times and frequencies will be given in "A.R." and Divisional broadcasts when they become available.

2 Metres: Activity is on the increase due to the presence of stations from central Victoria. Bill VK3ZEF in Bendigo is being worked regularly by Melbourne stations, while Bill VK3AMZ has finished his high power s.s.b. rig which uses a 4CX250B and the full legal power. Bill has also re-built his beam as the previous one became unserviceable.

70 Centimetres: No reports have been received for this band and this can be rectified only by the regular operators sending in details.

An extra v.h.f. field day to those listed in last month's "A.R." has been announced. Easter Sunday is a field day but there will not be one over the New Year holiday period.

Anyone in VK3 with news for this column should send it to Robert VK3AUR (Always UnReliable), c/o. Vic. Division.

73, Robert VK3AUR.

— . . . —

W.I.A. V.H.F.C.C.

New Members:

Cert. No.	Call	Confirmations 52 Mc.	144 Mc.
48	VK3ABA	—	119
49	VK3AOT	—	105
50	VK5EF	110	—

Amendments:

Cert. No.	Call	Confirmations 52 Mc.	144 Mc.
44	VK3AMK	132	—
46	VK3ZNJ	138	—
47	VK3ZNJ	—	230

160 Mx Transpacific Tests

The Trans-Pacific Tests which were so successful last season are to be repeated this summer, and dates and times are as follows:

Saturday, 30th November 1330-1600z.
" 14th December " "
" 28th " " "
" 11th January " "
" 1st February " "
" 15th " " "

Frequencies: W/VE West Coast 1975-2000
W/VE East Coast 1800-1810
JA 1907.5-1912.5
ZL 1876-1880.

Call: CQ-DX-TEST in five-minute periods, listening between calls. W/VEs lead off first period on the hour. All others lead off on the next five-minute period. Keep to periods unless in QSO.

Special JA sunset tests will be held on the same dates, but at 0730-1000z.

January 25/26 will almost certainly be the date for the "CQ" W.W. 160 Mx DX Contest, which has provided good openings in the past. More about this later. (Courtesy L6042)

— . . . —

PROVISIONAL SUNSPOT NOs.

AUGUST 1968

Dependent on observations at Zurich Observatory and its stations in Locarno and Arosa.

Day	R	Day	R
1	98	16	174
2	91	17	160
3	92	18	160
4	94	19	144
5	94	20	122
6	95	21	138
7	100	22	155
8	113	23	126
9	98	24	108
10	90	25	86
11	104	26	77
12	116	27	67
13	142	28	49
14	178	29	64
15	172	30	68
		31	63

Mean equals 110.9.
Smoothed Mean for Feb. 1968: 102.7.

—Swiss Federal Observatory, Zurich.

V.H.F. U.H.F.

Interested in what European Amateurs are accomplishing on these bands. Commencing January 1969, the authoritative German v.h.f. u.h.f. magazine UKW-Berichte will be published quarterly in English. 60 pages of the latest techniques, detailed construction articles on v.h.f. u.h.f. gear and antenna written by top Amateurs in Europe.

Annual subscription $4.50 AIR MAILED direct from the German publishers. Send a cheque/money order to the Australasian representative of UKW-Berichte, G. Clarke, VK2ZXD, 2 Beaconview St., Balgowlah, N.S.W., 2093.

A LIMITED number of sample copies of the German edition are available free for inspection.

DX

Sub-Editor: PETER NESBIT, VK3APN
32 The Grange, East Malvern, Vic., 3145

BAND NEWS

28 Mc.: CT2AS reported on 28599 at 2315z. This is an interesting country for those who delve into propagation, because CT2 is very close to the opposite side of the earth from VK2/3 and signals could arrive from any direction.

8P6AY—Barbados. Gordon operates 28600 around 2140z.

9K2BJ 28583 at 19z. QSL to P.O. Box 8419, Kuwait.

MP4BGX—Bahrein Isl. 28015 at 11z. If QSLing direct, send to R. E. Gregory, 3 A.C.C., Hamala, B.F.P.O., 63.

21 Mc.: PX1UP 21300 at 2043z. Tony and Konrod. QSL via HB9UP.

5Z4KO 21338 at 1930z, "Fred". QSL via WA1GIA.

VR6TC 21357 at 2245z. QSL direct.

9X5AA in Rwanda reported on 21317 at 22z. QSL goes via W1YRC.

ZS3D 21288 at 19z "Pat", and ZS3LU 21271 at 1830z. ZS3D's cards can go to P.O. Box 1205, Windhoek; and ZS3LU via W2CTN.

9K2CB 21275 at 1345z. 9K2BV reported at 18z on 21440, but probably the wrong time for VK.

VQ8CC is very active, 21036 at 14z. VQ8CJ is also active.

PY0QBC ex K8NWU will be active from Fernando de Noronha for about a year. He will be on 21 Mc. c.w./s.s.b.

ZD8Z activates 21030 at 13z.

W4UDF/AP is reported active on 21305 at 14/18z. QSL goes via WA9KMD.

CR3KD uses 21095 at 1230z. He hopes to have s.s.b. going very soon.

TN8BG has been reported on various different frequencies, 21038 to 21095, at times between 1145 and 2140z.

ZD8DG 21350 at 1330z, Dave. His QSLs can be sent c/o. B.B.C., Ascension Island, South Atlantic.

CT2AR on 21368 at 22z with QSLs via WA-4WIP; CT2AS 21310 at 20z with cards via K2AGZ.

CP1HW 21300 around 03z. Address is Gerald H. Kangas, Box 260, La Paz, or else via K7DVK.

CE0AE is QRV 21325 around the 20/22z mark.

3A2CN mainly 21300 Saturdays/Sundays 19z.

VE0MD 21045 at 14z.

14 Mc.: VP2AW on 14213 at 0022z (Antigua).

ZD8CC 14198 2132z. Cards should be sent via ZD8AR.

VS5TJ 14209 at 1050z. Also skeds WA5EFL every Monday about 1300-1330z on 14210. QSL via Box 308, Brunei Town, Brunei.

CR4BH 14206 at 01z, "Mary". QSL to Box 90, St. Vincent, Cape Verde Isl.

TL8GL 14212 at 2130z, "Gilbert". QSL to VE2DCY.

F2WS/FC on 14210 at 14z requests cards to his home QTH.

FB8WW is still active on 14036/018 at 0845 and 1130z.

CE0AC on Easter Isl. is active 02-07z. He uses 14120.

9H1M is active week-ends on 14190 around 04/05z; cards via K2GGN.

CE9AT 14190 20/23z, also 14063 at 02 and 13z. Raul skeds his QSL manager CE3ZN Fridays at 21/22z on 14185. ZE1AE and WB6GFJ may be able to help arrange skeds.

FL8AO 14115 at 20z. His address is Roland Rabaud, B.P. 91, Djibouti, T.F.A.I.

FY7YM skeds his QSL manager (in French), VE1KG, on 14160 at 02z.

OA8AAA reported on 14102 at 0646 and 14125 at 0648z, is a special call used by the Iquitos Centenary station; cards can be had via Box 193, Iquitos, Loreto, Peru.

FP0DM 14173 at 2230z; QSL via VE3FEC. FP0MD 14193 at 03z with cards via VO1FB.

HQ2GK on 14178 at 08z, also 22z. Operator is HR2GK who says QSL via VE1ASJ with s.a.e. and IRC.

IP1DK Pantelleria Isl. 14110 at 0630z. QSL manager is IT1ZGY.

ZK1AA has been quite active on various frequencies between 14200 and 14280 between 04 and 08z.

SV0WN in Crete 14034 at 23z.

LJ2X is QRV most days in the 14332 international YL net, try 20z.

TU2AK daily on 14130 at 1830z. TU2CF 14218 at 0740z.

YA2HWI 14020 at 22z is K9HWI who will be there for two years. Cards can go via W9FLJ; if direct, please SAE/IRC.

FR7ZG usually works around 14190/210 and has been reported at 12 and 18z. For an air mail reply, send 3 IRCs to Guy Langlios, Box 592, St. Denis, Reunion Isl.

7 Mc.: CR6LV heard on 7008 at 2155z.

9J2MX "Den" 7003 at 2120z. He hopes to be active 80 mx soon.

4S7AB "Sunil," worked at 2110z on 7005.

VP2KF 7070 s.s.b. at 2157z. QSL via VE3DLC.

ZD9BE 7062 at 22z.

9V1LK reported on 7005/15 at 23z daily. He will make skeds for 40/80 mx. Write to R. L. Halls, 12-B Robin Rd., Singapore.

9M2NF works s.s.b. on 7070/7098 around the 18/21z mark.

3A2CN, Pierre, sometimes operates 7060/65 at 22/24z. His manager is DL7FT.

KC4USM on 7010 at 1050z.

CT1MU on 7030 c.w. at 23z.

8R1H reported on 7026 at 2330z.

Gene W4BRB worked VQ8CC on 7002 at 1130z—long path—local time in VQ8 land would have been 3.30 in the afternoon! Gene says that 40, like 10, is often more open than the casual listener realises. (40 always seems more closed to me; I'm sure there's a permanent one way skip zone hovering around here.)

3.5 Mc.: 9M2NF is sometimes active 3695/3700 around 18/21z. He will go QRT sometime in December.

ZS5JM worked on 3505 at 2050z; also ZS5QU again at 2020z.

1.8 Mc.: On 21st Sept., Harry VK3GU worked W1BB on 1805 at about 1010z. Stew's signals were up to S5 at times until they dropped out at 1035z. W1BB intends to be on often from 10 to 11z.

ZL1PL has been contacted by several VKs; he uses approx. 1883 and had a very nice signal here at 1125z. George runs 150w. to a top loaded vertical (actually an 80 mx windom).

W6QHQ will be on 160 mx every Friday from 1st Oct. at 1330/1400z looking for VK QSOs. He has already worked JA, 9V1 and 8F on this band.

W0VXO is planning 160 mx operation from the West Indies shortly.

Others active: EI9AW/P 1827 2224z. GD3XJR 1828 2206z. GM3UGC 1875 1930z. HB9T 1875 2150z. G3LSF/LX 1878 2200z. (This should give some idea of European activity.)

ASSORTED

As from 1/1/69, stations in the Netherlands Antilles will change their prefixes to the following: PJ2 Curacao, PJ3 Aruba, PJ4 Bonaire, PJ5 St. Eustatius, PJ6 Saba, PJ7 Sint Maartin, PJ8 issued to visitors to isls. in zone 8, PJ9 issued to visitors to isls. in zone 9. PJ1 and PJ0 will be used for special contest and DX-pedition operations. PJ stations will also be allowed to use 160 mx, which they have previously not been able to use.

FP0 is a prefix used from St. Pierre by visitors in lieu of the FP8 used by local residents.

Next February, W6BPO is going to Norfolk Isl. and will operate s.s.b. under the call of VK2BPO/9.

Gentlemen! It appears that in the Sept. DX Notes I committed the Dastardly Deed of the Year by calling ZF1DX a pirate. A very genuine looking QSL from ZF1DX for a 20 mx s.s.b. QSO arrived courtesy of VK4UC; was my face red! The original report appeared in an overseas DX bulletin. (Incidentally, the reason for reproducing the original item was simply to save people the time and money in QSLing direct for non-existent QSOs.)

A2 is the prefix allotted by I.T.U. to Botswana (formerly Bechuanaland). The new prefix is sported by A2CAH (ex ZS9H) and A2CAQ (ex ZS9Q).

VE6s AJT, APV are at present on a DX-pedition of Pacific areas including VR1, 5, ZK1, ZM7 and 5W1. QSL via VE6AO.

Do not interrupt VS5TJ's private skeds or he will go QRT. He will be there 18 months, so there is plenty of time to work him.

Due to the political situation in Togo, 5V stations are off the air for some months. DX-ers are advised not to send any cards to Togo or to QSL managers who are unable to obtain logs.

Questionable validity surrounds 5X5HH, whose alleged QSL manager knows nothing about it. Better check the beam on this one—he may be operating from Cray Island. (FLADXA)

Roger Baines, ex MP4TBO, will be operating G3YBO 20 mx s.s.b. as from December and looking for VK contacts.

W9WNV and K7LMU cards are handled by W0BN, 8713 Charlton Lane, Affton, Mo., 63123. Cards will be returned directly if enough IRCs plus SAE (or SASE) are included, otherwise via the Bureau. A list from W0BN gives the following calls for which he is manager:

BY4SK	VQ8CBR	W9WNV/KS6
FR7ZP	VQ8CCR	W9WNV/MM
G5AEW	VQ8CHR	W9WNV/XU
G5AEW/ZS	VQ9AA	W9WNV/ZK1
K1IMP/KC4	VQ9AA/A/C	W9WNV/ZM7
K7LMU/HC8	VQ9AA/D/F	W9WNV/8F
K7LMU/HS	VQ9AA/MM	XW8BF
K7LMU/TI9	VR2EW	XZ2TZ
K7LMU/3W8	VR5AB	YJ8WW
PY0XA	VU2WNV	ZK2AF
VK2ADY	W9WNV/	1B9WNV
VK2ADY/9/0	Blenheim	1G5A
VQ8CB	W9WNV/FO8	1M4A
VQ8CB/A	W9WNV/	1S9WNV
VQ8CBB	Geyser	5R8BA
VQ8CBN	W9WNV/HK0	5W1AD

The log for FW8ZZ was lost, so no cards are available for this one.

ACTIVITIES

After several weeks off the air, David VK-3QV is back again. He says conditions are on the up and up and at the end of Sept. very good on the s.p. to U.S.A. from 2045z. Africans rare, but Europeans beginning to appear about 18z. Latest contacts include: DJ4OQ, G3OHP, KA9MF, TG9CD, UA3KBO, VE3GGK, 9M2RH, UV3AAM, VE7EO, UJ8KAJ, VE7PAR, UP2ER, VR2FR, JA1, 2, 3, 4, 5, 6, 7, 8, 0, JH1, and all W/K call areas several times over (all 28 Mc. s.s.b.). (Thanks Dave—Peter.)

From Barry VK5BS: Latest 20 mx contacts are EA8CF, HK4ALE, F8FE/P, F8JH, G3FIM, OZ2X, plus numerous Ws and VEs. On the 160 mx front, worked ZL3GQ, ZL3BC, have heard W1BB, a W0 and an unidentified "something" which called me on 1806. (Perhaps your long path signal coming back?). (Many thanks Barry, Peter.)

Chas VK4UC has been having fun with a new rig for several weeks. In 21 days, 102 countries on 14 Mc. s.s.b. were worked with a ground plane! These included: ZD7DI 0730z, 6Y5DW 1200, AP2MR 1200, SK6AB 1330, PJ2MI 1000, UP2LR 0730, PZ1BW 1000, KW6AA 0900, EA8FF 0730, UA1CK 0630, LA1K 0700, CR5SP 0700, OA8V 1200, OZ3Y 0700, ZS5FF 1230, VS-5TJ 1200, 6O1GB 1130, OX3DJ 1300, LX1SK 0730, ZB2AY 0600, ON4DY 0400, EP2DA 1330, PA-0STU 0600, 4U1ITU 0630, UA2KBD 0430, 5W1AR 0430, HP1JC 0700, UF6CW 0400, WF0ITU 1330, GC2FMV 0700, ET3REL 1330, CR6LF 0630, 5Z4JH 1330, YN1GLB 1200, IS1TDW 0630, HB0AIC 0630, VE7IR/YB1, 9H1M 2200, CO2FA 0700, IS1RUA 0730, PA0VER 0700, 5N2AAX 0630 . . . plus the rest! (Could there be much **more**? Thanks Chas.—Peter.)

Ron VK3ARV has found 14 Mc. variable lately. An interesting contact was made with OM3AKQ who gave his QTH as Usti (Czechoslavakia). Also heard but not worked was OM3YD. Does the new prefix imply UA influence? More news as it comes to hand. Best QSLs of the month include KR8EA, UA-0JT, UA0VL, DJ6SI, and others. Ron's country total now stands at about 260. (Thanks Ron.—Peter.)

From W.A. comes a letter from George Allen, L6042, who has been busy on 160 mx. Recently heard: 1805: VKs 3ACH, 3APN, 3GU, 3NW, 5KO, 5RO, 5BS, 7MZ. All c.w. 1825: VKs 3ACH, 3APE?, 3GU, 3XJ, 5RO. All phone. 1880: ZL-3GQ c.w. 2045: KPH, 12 dates in Aug. 2048: WNU, 1 date in Aug. (Thanks George, Peter.)

SOME QSLs

WF0ITU—K0YKJ	CO2FA—XE1AE
SV0WI—K4AVD	EA6BC—W4SYL
PY0APS—PY7APS	HP0A—HP1AC
ZF1DX—K6KDS	PX1RG—DJ6AR
GC5AGA—K4II	YA8MH—DL8MH
G5AGA—K4II	TT8AN—W5LEF
PY0BLR—PY4BK	OX3DX—OZ3FD.

SUMMARY

Acknowledgments to the following for kindly supplying news for this month's column: LIDXA, FLADXA, G3UGT, ZL2AFZ, G. Watts News Sheets, VK3QV, VK4UC, VK3ARV, VK-3AUT, VK5BS, L6042, W0BN, VK3GU.

Deadline for news is the end of each month, so please send any items to the address at the top of the page. 73, Peter.

— . . . —

BULAWAYO 75th ANNIVERSARY AWARD

1. **Period.**—Contacts to be made during the period 1st to 30th November, 1968, inclusive.
2. **Contacts** to be made with at least **three Bulawayo** stations.
3. **Modes** to be two-way c.w. or phone.
4. Any Amateur band.
5. **Claims** for the Certificate, in the form of a certified log extract, together with three I.R.C's, must be sent to: Matabeleland Branch, Radio Society of Rhodesia, P.O. Box 1372, Bulawayo, or R.S.R. QSL Bureau, P.O. Box 2377, Salisbury, and must be post-marked not later than 31st December, 1968.

Get . . . MAXIMUM SIGNAL transfer, with minimum power loss!

USE FORMULA III., "LO-LOSS" OPEN WIRE TRANSMISSION LINE

★ DESIGNED FOR UHF-VHF OPERATION.
★ SOLID COPPER CONDUCTOR
★ CONSTANT 300 OHM IMPEDANCE
★ POLYTHENE SPACERS
★ USED BY SERVICES AND GOVT. DEPTS.

Formula III. Aerial Feeder compared with ribbon in db's per 100 ft., at 100 Mc.:

		WET	DRY
Formula III. Aerial Feeder	300Ω	1.2	0.4
Flat Ribbon	300Ω	7.6	1.5

USE GENUINE "LO-LOSS" STAND-OFF INSULATORS

Available from electrical and radio parts wholesalers

Australian Manufacturer:

E. W. CORNELIUS PTY. LTD.

182 BAY STREET, BRIGHTON, VIC., 3186 **Phone 96-3232**

BRIGHT STAR CRYSTALS

FOR ACCURACY, STABILITY, ACTIVITY AND OUTPUT

Our Crystals cover all types and frequencies in common use and include overtone, plated and vacuum mounted. Holders include the following: DC11, FT243, HC-6U, CRA, B7G, Octal, HC-18U.

THE FOLLOWING FISHING-BOAT FREQUENCIES ARE AVAILABLE IN FT243 HOLDERS:
6280, 4095, 4535, 2760, 2524 Kc.

5,500 Kc. T.V. Sweep Generator Crystals, $7.25; 100 Kc. and 1000 Kc. Frequency Standard, $17; plus Sales Tax.

Immediate delivery on all above types.

AUDIO AND ULTRASONIC CRYSTALS—Prices on application.

455 Kc. Filter Crystals, vacuum mounted, $13 each plus Sales Tax.

ALSO AMATEUR TYPE CRYSTALS — 3.5 Mc. AND 7 Mc. BAND.

Commercial—0.02% $7.25, 0.01% $7.55, plus Sales Tax.
Amateur—from $6 each, plus Sales Tax.
Regrinds—Amateur $3, Commercial $3.75.

CRYSTALS FOR TAXI AND BUSH FIRE SETS ALSO AVAILABLE.

We would be happy to advise and quote you.

New Zealand Representatives: Messrs. Carrel & Carell, Box 2102, Auckland.
Contractors to Federal and State Government Departments.

BRIGHT STAR RADIO

LOT 6, EILEEN ROAD, CLAYTON, VIC. **Phone 546-5076**

With the co-operation of our overseas associates our crystal manufacturing methods are the latest.

Book Review

MULLARD SEMICONDUCTOR INTERCHANGEABILITY LIST

This book is the successor to eight editions of the Mullard Transistor Interchangeability List. The title has been changed in keeping with its wider scope. The new issue has been enlarged to include, in addition to transistors, direct Mullard equivalents and comparable types for small signal diodes, zener diodes, rectifier diodes, thyristors and semiconductor photoelectric devices. The book, which contains 31 pages with over 4,000 entries, is available from Mullard-Australia Pty. Ltd., cover price $1.

NOTES ON SOLAR FLARE WARNINGS FOR SUPERSONIC TRANSPORT AIRCRAFT

This booklet makes available information about the aspects of the work of the Ionospheric Prediction Service Division, Bureau of Metrology, which may be of some interest, but would not normally be published in any scientific or technical journals. Apart from the introduction, the booklet contains five sections covering a summary of the problem, solar activity and proton flares, forecasting of solar events, existing warning systems and an outline of a possible warning system for supersonic transport aircraft.

Although not directly connected with Amateur Radio, the information is interesting, especially for anybody interested in radio astronomy.

☆

HINTS AND KINKS

TRANSCEIVER RELAYS

Some transceiver owners have reported that replacement relays are difficult to obtain and are expensive.

Many imported transceivers use relays similar to the Siemen's "Cradle" type. Relays for various coil voltages and up to four change-over sets are available from Siemens or Relays Pty. Ltd.

Associated Controls Pty. Ltd., Padstow, N.S.W., and their Victorian agents Eastern Instrument Pty. Ltd. in Melbourne can supply Allied or Varley relays with six sets of change-over contacts with heavy duty contacts for those critical positions.—VK3ASC.

☆

NOVEL MAINS TESTER

A pocket size neon lamp indicator suitable for testing a.c.-d.c. voltages from 100v. to 500v. is now available from Radio Parts Pty. Ltd., Melbourne.

Known as the Stuart brand, this handy tester has flexible leads with prods marked positive and negative (red-black), and is fitted with vest pocket clip. Insulated alligator clips can be supplied also to fit the prods. Trade price for neon tester: 60c each; insulated clips: 10c each; 15% sales tax applicable.

FEDERAL QSL BUREAU

Divisional QSL Managers are advised that there is no official Bureau for FR7 Reunion Island and cards should be sent either direct to the station concerned or via R.E.F., Paris. This information comes from FR7ZG.

Information on the DX Contest staged by I.A.R.U. Region 2 (Americas) on October 12 and 13 was received too late for prior publication. Anyone interested may obtain all information re scoring and logs from this Bureau.

Congratulations to Al Manwaring, VK2QK, of Cootamundra, on achieving CHC100 High Honors award. All CHC members will realise the ability and work involved in qualifying for this honor.

W3VVP, George Clough, of Cordova, Maryland, U.S.A., is desirous of arranging a s.s.b. sked with a VK station over the period Dec. 13 to 18. The purpose of the desired sked is to receive information on the progress of the London-Sydney marathon car race in which his friend, Sidney Dickson, is a competitor. Sid is the only U.S.A. participant in the event, the Australian section of which is due to leave Perth on Dec. 13 and to arrive in Sydney on Dec. 18. Your scribe has offered c.w. skeds to W3VVP, but as he is a s.s.b. addict it is suggested that any s.s.b. station willing to co-operate should contact George at Box 34, Route 1, Cordova, Maryland, 21625, U.S.A.

K6BX, founder of CHC, advises of the 1st CHC International C.W. DX Contest scheduled for 0001z, Saturday, Dec. 7, to 2400z, Sunday, Dec. 8. The contest is open to all Amateurs whether CHC members or not. The contest is sponsored by the International C.W. CHC Chapter 73. All Amateur bands may be used and the usual six-figure exchange is employed commencing with RST plus 001, etc. Awards are trophies for world highest, single operator, club station, and portable stations and certificates for the three highest scoring stations in each VK division. Printed slips regarding scoring, logs, etc., may be obtained from this Bureau.

Congratulations to the Victorian Division on the success of their recent unusual 160 metre contest. The provision of cross-mode and cross-band contacts made for a wealth of interest to all participants. A word of thanks is also due to the Interstate and ZL stations who contributed to the success by participating in the event.

—Ray Jones, VK3RJ, Manager.

— • • • —

FEDERAL AWARDS

AUSTRALIAN D.X.C.C. COUNTRIES LIST AMENDMENTS

Deletions:

VS9H—Kuria Muria Is. Only contacts prior to 29/11/67 will be credited. From 30/11/67 VS9H counts as MP4M—Muscat and Oman.

ZC6—Palestine. Only contacts prior to 2/7/68 will be credited.

Additions:

Blenheim Reef, Geyser Reef. These two countries will be credited if contacts were after 4th May, 1967.

Nelsons Is. will count as Chagos and is not a separate country. This also will be credited after 4th May, 1967.

Where cards for the above additional countries have been forwarded for credit prior to this time they have been noted. The countries have now been credited and members' totals amended accordingly. In the case of the deleted countries, all members who have claimed them have had their scores amended as necessary. Space does not allow a full list of all amendments.

UNACCEPTABLE OPERATIONS FOR D.X.C.C.

QSLs from the following will not be credited for D.X.C.C.:—

K7LMU/HC8E—Ebon.
K7LMU/TI9C—Cormaran.
K1IMP/KC4—Navassa.
VU2WNV—Laccadives.
VQ9AA/C—Chagos.
PY0YA—St. Peter & St. Paul's Rocks.
VK2ADY/0—Heard Is.
IB9WNV—Blenheim Reef.
IG5A—Geyser Reef.

OVERSEAS AWARDS

The Federal Awards Manager advises members of the W.I.A. that the following awards may be obtained without the necessity of forwarding cards overseas. Cards will, where necessary, be checked in VK. Application forms, rules, etc., may be obtained by forwarding a s.a.s.e., size 9 x 4 inches, to the Federal Awards Manager, W.I.A., Box 2611W, G.P.O., Melbourne, Vic., 3001.

"CQ" Awards: "CQ" magazine issues the following awards: Worked Prefixes—WPX; Worked All Zones—WAZ; S.S.B. DX Award.

J.A.R.L. Awards: AJD—All Japan Districts; WAJA—Worked All Japan Prefectures; JCC—Japan Century Cities.

I.A.R.U. Award: WAC—Worked All Continents.

—Geoff Wilson, VK3AMK, Manager.

— • • • —

Publications Committee Report

The Committee met on 7th October, when correspondence was received from VK5MY, VK5WA, VK5QX and VK3UG, the last two named also submitted technical articles, as did VK2ASI. Official acknowledgments have been sent to these authors.

The Committee had hoped to review our financial position following the publication of the October issue, but this was not possible as printing and mailing accounts had not arrived, hence no decision could be reached regarding the size of the November issue. This will be decided before going to press.

Production of the Call Book is progressing and by the time this appears in print the publication will be available from all the usual sources.

All the information sought by the subcommittee appointed at the last Federal Convention has been collated and passed to them, and we understand the final report is now being completed ready for submission to the Federal Councillors. The outcome of this report is eagerly awaited by the Committee, as the future of "A.R." depends very much on the results.

The Committee considered and reached final agreement on the form of the questionnaire which had been under consideration for several months. This questionnaire will be found in the centre pages of this issue and we request all readers to complete it and return it immediately.

— • • • —

CONTEST CALENDAR

Until 31st Dec.: Concurso Mexico 1968 (L.M.R.E.).
9th Nov.: International OK DX Contest.
9th/10th Nov.: 7 Mc. Phone Contest (R.S.G.B.).
23rd/24th Nov.: "CQ" W.W. DX Contest (c.w.).
7th Dec. 1968 to 12th Jan. 1969: Ross A. Hull V.h.f. Contest (W.I.A.).
1st/2nd Feb. 1969: John Moyle Memorial National Field Day (W.I.A.).
1st/2nd Feb. 1969: A.R.R.L. DX Test (phone section).

CIRCUIT BOARDS NOW AT REDUCED PRICES

1 to 99, 15c per transistor; 100 to 499, 12c; 500 and over, 10c. Diodes, etc., free. Technical details supplied. Minimum order $2.00.

W.I.A. (TASMANIAN DIVISION)
Box 851J, G.P.O., Hobart, Tas., 7001

Stockists of Radio and Electronic Components for the Amateur Constructor and Hobbyist
First Ring, Write or Call on
WILLIAM WILLIS & Co. Pty. Ltd.
430 Elizabeth St., Melbourne. Ph. 34-6539

Repairs to Receivers, Transmitters; constructing and testing; xtal conv., any frequency; Q5-ers, R9-ers, and transistorised equipment.
ECCLESTON ELECTRONICS
146a Cotham Rd., Kew, Vic. Ph. 80-3777

ATTENTION
VK5's
ELIZABETH SURPLUS SUPPLIES
(newly opened)
offers you Disposals Equipment at Lower Prices
OPEN ALL DAY SATURDAY
Elizabeth Surplus Supplies
TRIMMER ROAD, ELIZABETH SOUTH, S.A.

HAMADS

Minimum $1 for forty words. Extra words, 3 cents each.

HAMADS WILL NOT BE PUBLISHED UNLESS ACCOMPANIED BY REMITTANCE.

Advertisements under this heading will be accepted only from Amateurs and S.w.l's. The Publishers reserve the right to reject any advertising which, in their opinion, is of a commercial nature. Copy must be received at **P.O. 36, East Melbourne, Vic., 3002,** by **5th of the month** and **remittance must accompany** the advertisement.

AVO Electronic Testmeter Mk. 4. Multimeter, V.T.M. and watt meter all in one. Can be used up to 200 Mc. New price $225, accept $90, mint condition. Heathkit S.W.R. Bridge, $20. 522 Tx and 230v. power supply (heavy duty) to suit, $30. VK3ABV. Phone 848-3018 (Melbourne).

COMPLETE S.S.B. Station, Galaxy III., Xtal Calibrator, External V.F.O., Mike, Audio Compressor, new P.A. Tubes, in mint condition, A.C. Power Supply, Ant. Transmatch with built-in S.W.R. Bridge, Speaker, G4ZU Cross Beam, Rotatable Mast, Drive Gear, Indicator and Cables, $395, o.n.o. VK5ON, 45 Pekina St., Eden Hills, S.A., 5050.

CREED Model 78 Teleprinter (Page Printer), 1st class order. VK4PJ, 16 Bede St., Balmoral, Qld., 4171. STD 99-2881.

FOR SALE: American Mosley A7GS 7 element Yagi for 6 metres, 12 db. gain, 22 ft. boom, gamma match, will handle 1,000 watts a.m. May be matched to 52 or 72 ohm co-ax lines, $30. Swinton, VK2AAK, Kulnura, N.S.W.

FOR SALE: American Parkes Converter, 50 to 54 Mc., 28 Mc. I.F., R.F. amp. Nuvistor, noise figure 2.5 db., in-built power supply, 110v. 50/60 cycles, as new, $30. Swinton, VK2AAK, Kulnura, N.S.W.

FOR SALE: Eddystone GC Rx, 480 Kc. to 30 Mc., 2RF, 2IF, Var. Sel. IF's, etc. 1st class condition, $220. Qty. Ham gear, 6-9 Command Rx, AR8 Rx, BC221 Freq. Meter, Pye Reporter, 10w. Transistor Modulator, 12v. d.c./325v. d.c. converter, all cheap. Ring. Melb. 57-4260 for details.

FOR SALE: Hallicrafter SX117 triple conversion Receiver, operates most freq. from 85 Kc. to 30 Mc. Crystal locked 1st and 3rd conversion oscillator, less than ½ mV. sensitivity. Selectivity 500 c.p.s.-2.5 Kc. and 5 kc., prod. det., i.f. noise limiter, 100 kc. xtal calibrator, variable T notch filter, xtals for 9.5-10, 3.5-4, 7-7.5, 14-14.5, 21-21.5, 28-30 Mc. Very low noise level, high sensitivity rx in best condition, used for DX and Amateur satellite work. $380. Swinton, VK2AAK, Kulnura, N.S.W.

FOR SALE: Transceiver, Drake TR3, with a.c. pack, d.c. mobile pack, Webster all-band whip, S.W.R. Meter, $700 lot. S. Widgery, 181 Victoria St., Ballarat, Vic., 3350.

SELL: Yaesu FL50 Transmitter, FR50 Receiver, FV50 VFO. Also K-109 S.W.R. Meter, Microphone, Crystal Calibrator. Excellent condition. Complete S.s.b. station, $300 or near offer. VK3AHP, 37 Byfield St., Reservoir, Vic. Phone 46-2057.

WANTED: One or more 4E27 or 4E27A tubes. W. J. Emmett, VK7WF, 6 Haig Street, Lenah Valley, Tas., 7008.

WANTED: Teleprinter Tape Reperforator and Tape Transmitting Equipment. Prefer Creed. VK4NP, P.O. Box 81, Albion, Brisbane, Qld., or Phone 62-1351.

TRIO

COMMUNICATIONS RECEIVER

9R-59DE

- 4 BANDS COVERING 540 Kcs. TO 30 Mcs.
- TWO MECHANICAL FILTERS ENSURE MAXIMUM SELECTIVITY.
- PRODUCT DETECTOR FOR S.S.B. RECEPTION.
- AUTOMATIC NOISE LIMITER.
- LARGE TUNING AND BANDSPREAD DIALS FOR ACCURATE TUNING.
- CALIBRATED ELECTRICAL BANDSPREAD.
- "S" METER AND B.F.O.
- 2 MICROVOLTS SENSITIVITY FOR 10 dB S/N RATIO.

SPECIFICATIONS:
Frequency Range: Band A—550-1600 Kcs.
Band B—1.6-4.8 Mcs.
Band C—4.8-14.5 Mcs.
Band D—10.5-30 Mcs.
Calibrated Electrical Bandspread:
80 and 40 metres—5 Kcs. per division.
20 and 15 metres—20 Kcs. per division.
10 metres—50 Kcs. per division.
Antenna Input: 50-400 ohms impedance.
Audio Power Output: 1.5 watts.
Sensitivity: 2 μV for 10 dB S/N Ratio (at 10 Mcs.).
Selectivity: $\pm$5 Kcs. at —60 dB ($\pm$1.3 Kcs. at —6 dB).
When using the Mechanical Filter.
BFO Frequency: 455 Kcs. $\pm$2.5 Kcs.
Speaker Output: 4 or 8 ohms.
Headphone Output: Low impedance.
Power Consumption: 45 VA at 115/230 volts A.C. 50/60 Cps.
Tube Complement: V1—6BA6 RF Amplifier.
V2—6BE6 Mixer.
V3—6AQ8 HF Oscillator.
V4—6BA6 1st IF Amplifier.
V5—6BA6 2nd IF Amplifier.
V6—6BE6 Product Detector.
V7a—6AQ8 Beat Frequency Oscillator.
V7b—6AQ8 1st AF Amplifier.
V8—6AQ5 Audio Output.
IN60—AF Detector.
IN60, SW-05S—AVC.
SW-05S—ANL.
SW-05S x 2—Rectifiers.
Dimensions: 7" High, 15" Wide, 10" Deep.
Weight: 19 lbs.

PRICE: FOR/FOA SYDNEY: $175.00

CONSULT YOUR LOCAL RADIO DEALER, OR

MAIL THIS COUPON *today*

Please forward free illustrated literature and specifications on Trio equipment.

Name .....

Address .....

Weston electronics PTY LTD
SYDNEY, AUSTRALIA

(A unit of Jacoby Mitchell Holdings Ltd.)
376 EASTERN VALLEY WAY, ROSEVILLE, N.S.W.
Cables and Telegraphic Address: 'WESTELEC,'
Sydney. Phone: 40 1212

LOW DRIFT CRYSTALS

☆

1.6 Mc. to 10 Mc.,
0.005% Tolerance, **$5**

☆

10 Mc. to 18 Mc.,
0.005% Tolerance, **$6**

☆

Regrinds $3

THESE PRICES ARE SUBJECT TO SALES TAX

SPECIAL CRYSTALS: PRICES ON APPLICATION

MAXWELL HOWDEN

15 CLAREMONT CRES.,
CANTERBURY, E.7,
VICTORIA
Phone 83-5090

LOG BOOK

IS NOW AVAILABLE

Larger, spiral-bound pages with more writing space.

Price 75c each

plus 17 Cents Post and Wrapping

Obtainable from your Divisional Secretary, or W.I.A., P.O. Box 36, East Melbourne, C.2, Victoria.

HY-GAIN (U.S.A.) ANTENNAS AND BEAMS

- 18HT 50 ft. Hy-Tower for 80 through 10 metres.
- 14AVQ 40 through 10 metres, and 18AVQ 80 through 10 metres Trap Verticals.
- 103BA, 153BA, 204BA Mono-band Beams for 10, 15 and 20 metres.
- TH6DXX, TH3MK3, TH3Jr Tri-band Beams.
- 2BDQ and 5BDQ Multi-band Trap Dipoles.
- 18TD Reel Tape Portable Dipole, 10 through 80 metres.
- C.I. Special Plastic Dipole, mil. spec., centre insulator, accepts 1/4" or 3/8" co-ax.
- E.I. Rugged 7" End Insulators for multi-band or single band dipoles.
- BN-86 all band H.F. Ferrite Baluns for Beams and Dipoles.
- Selection of spare parts for replacement purposes.

ALSO A LARGE RANGE OF V.H.F. ANTENNAS—

6 mx and 2 mx Ground Planes, V.H.F. Mobile Whips, 6 mx and 2 mx Halos. SJ2S4 4-element 2 mx stacked Vertical Jay-Pole. V.H.F. Beams, DB62 Duo-bander for 6 and 2 mx, LP62 Log Periodic for 6 and 2 mx, 215B 15-element 2 mx, 28B 8-element 2 mx, 23B 3-element 2 mx, 66B 6-element 6 mx.

Imported from U.S.A. by HY-GAIN ELECTRONIC PRODUCTS (AUST.) PTY. LTD.

Distributors: **BAIL ELECTRONIC SERVICES**

60 SHANNON STREET, BOX HILL NORTH, VIC., 3129 **Phone 89-2213**

GELOSO

SIX-BAND AMATEUR RECEIVER

Geloso

G4/216

AMATEUR PRICE:
$225.60
plus Sales Tax 25%

Geloso Transmitters, VFO's and Receivers have been sold in Australia for 20 years, giving utmost satisfaction. Performance of a well designed and engineered Receiver is guaranteed by Geloso—ask a man who owns one. The G4/216 has everything modern about it. The front-end is xtal controlled. It has a crystal filter and crystal calibrator incorporated. Sensitivity, stability and selectivity are top notch for Amateur work. Finally, stocks are available from our warehouse. Send for bulletin number 103. It tells you all about the G4/216.

TECHNICAL DETAILS

Frequency Ranges: 10 metre band (28-30 Mc.), 15 metre band (21-21.5 Mc.), 20 metre band (14-14.5 Mc.), 40 metre band (7-7.5 Mc.), 80 metre band (3.5-4.0 Mc.); 144-146 Mc. (26-28 Mc.) for external VHF Converter.
Intermediate Frequency Rejection better than 70 db.
Sensitivity better than 1 uV. for 1 watt a.f. output.
Signal-to-Noise Ratio at 1 uV. better than 6 db.
Selectivity: Five positions—normal, xtal 1, xtal 2, xtal 3, xtal 4.
Reception of Amplitude Modulated Signals.
Reception of Single-Sideband Signals (s.s.b.): Amplifier and detector circuit for s.s.b. signals, with carrier re-insertion.
Noise Limiter: Effective with all types of signals. Self-adjusting to various signal levels.

SOLE AGENTS: R.H. Cunningham PTY. LTD.

608 COLLINS STREET, MELBOURNE, VIC., 3000
Telephone 61-2464

64 ALFRED STREET, MILSONS POINT, N.S.W., 2061
Telephone 929-8066

BOOKS OF INTEREST FOR AMATEUR OPERATORS

★ A.R.R.L. — **THE RADIO AMATEUR'S HANDBOOK** — 45th Ed., 1968 Edition .... **Price $6.15** posted
★ A.R.R.L. — **THE A.R.R.L. ANTENNA BOOK** .... **Price $3.05** posted
★ A.R.R.L. — **HOW TO BECOME A RADIO AMATEUR** .... **Price $1.55** posted
★ A.R.R.L. — **A COURSE IN RADIO FUNDAMENTALS** .... **Price $1.55** posted
★ A.R.R.L. — **THE RADIO AMATEUR'S LICENSE MANUAL** .... **Price $0.90** posted
★ A.R.R.L. — **THE RADIO AMATEUR'S V.H.F. MANUAL** .. .. **Price $3.85** posted
★ A.R.R.L. — **SINGLE SIDEBAND FOR THE RADIO AMATEUR** .... **Price $3.75** posted
★ A.R.R.L. — **UNDERSTANDING AMATEUR RADIO** .... **Price $3.15** posted
★ STONER & EARNSHAW — **THE TRANSISTOR RADIO HANDBOOK** .... **Price $6.75** posted
★ MIVEC — **RADAR, PRINCIPLES AND PRACTICES** .... **Price $5.30** posted
★ ELECTRONICS AUSTRALIA — **BASIC RADIO COURSE** .... **Price $1.65** posted
★ ORR — **MOBILE HANDBOOK** .... **Price $3.45** posted
★ DOUGLAS & ASTLEY — **TRANSISTOR ELEC. ORGANS FOR THE AMATEUR** .. **Price $3.15** posted
★ HANDEL — **A DICTIONARY OF ELECTRONICS** .... **Price $1.40** posted
★ ORR — **RADIO HANDBOOK**, 17th Edition .... **Price $13.60** posted

McGILL'S AUTHORISED NEWSAGENCY

Established 1860 — **183-185 ELIZABETH STREET, MELBOURNE, VIC., 3000**

The G.P.O. is opposite — **Phones 60-1475-6-7**

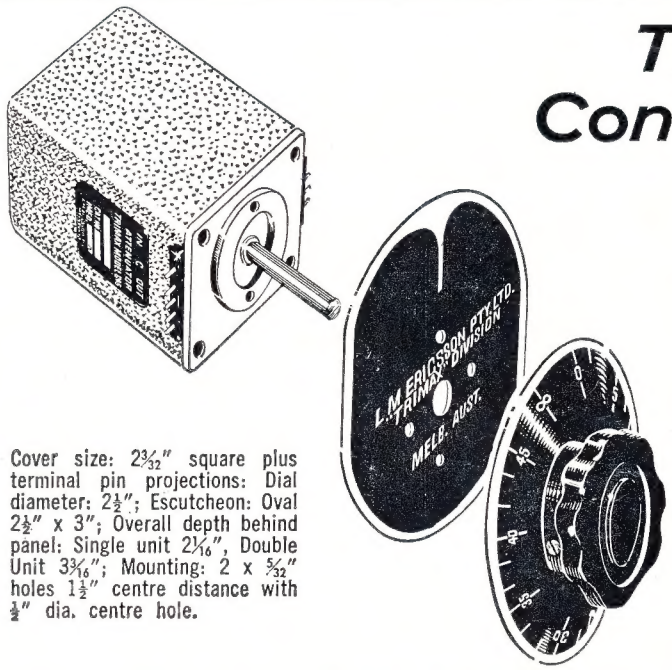

The Ultimate in Control Reliability!

ATTENUATORS AND FADERS by TRIMAX

Cover size: 2 3/32" square plus terminal pin projections: Dial diameter: 2½"; Escutcheon: Oval 2½" x 3"; Overall depth behind panel: Single unit 2 1/16", Double Unit 3 3/16"; Mounting: 2 x 5/32" holes 1½" centre distance with ½" dia. centre hole.

The 'Trimax' Model G.45 Fader is a new design evolved from experience gained over twenty years of this type of manufacture, and features solid non-staining silver alloy contacts, floating rotor with three contact pressure points, optimum, permanently maintained contact pressure, rigid four pillar construction.
Porous bronze main bearing, stainless steel spindle, high quality phenolic resin stud plates with acetal resin rotor bosses, diamond lapped contact surfaces, positive knob stop in addition to individual rotor stop, high stability resistors.

L M ERICSSON PTY. LTD.
"TRIMAX" DIVISION
FACTORY: CNR. WILLIAMS RD. & CHARLES ST., NORTH COBURG, VICTORIA. 'PHONE: 35-1203 . . . TELEGRAPHIC ADDRESS: "TRIMAX" MELB.
LM50

A LARGE RANGE OF TRANSMITTERS, RECEIVERS, TEST GEAR, AND DISPOSALS RADIO PARTS AVAILABLE

- **CRYSTAL CALIBRATOR No. 10**

  Nominal Frequency Range: 550 Kc. to 30 Mc. Internal 500 Kc. crystal. VFO frequency coverage: 250-500 Kc. 2 Kc. dial divisions.

  Used (good condition): **$10.50.**
  New (sealed cartons): **$13.00.**
  Packing and freight: $1.50.

- **MILLER 8903B PRE-WIRED I.F. STRIPS**

  455 Kc. centre frequency, 55 db. gain. Employs two PNP transistors and diode detector.

  Price **$9.50.**

- **EICO 753 TRI-BAND S.S.B. TRANSCEIVER**

  Full CW-AM-SSB coverage, 80-40-20 metres. 180w. PEP SSB-CW. VOX-PTT-ALC. 10 Kc. Receiver offset tuning.

  Kit **$328.78**, Wired **$428.78**.

WANTED TO BUY

Communication Receivers, Test Equipment, etc. Call, write or phone Equipment inspected and picked up at your convenience any night or week-end.

- **VALVE SPECIALS**

  807—70 cents ea.
  815—70 cents ea.
  6AC7—20 cents ea. or 12 for $2.
  6J6—30 cents ea. or 7 for $2.
  6CQ6—20 cents ea. or 6 for $1.
  VR150/30—75 cents ea. or 3 for $2.
  VR105/30—75 cents ea. or 3 for $2.
  QB2/250 (813)—$7 ea.
  TZ40—75 cents ea.
  6H6 (Metal)—20 cents ea.
  DM71 (Indicator Tube)—40c ea. or 6 for $2.

- **TRANSISTORS**

  2SC73
  2SD65
  2T65
  2T76
  OC66

  All at Bargain Price of **25 cents each.**

- **STAR SR700 SSB AMATEUR BAND RECEIVER**

  Frequency coverage: 3.4-29.7 Mc. in 7 bands. Triple conversion, employs xtal locked 1st and 3rd conversion oscillators. Selectable USB or LSB. Selectivity variable, 0.5 Kc. to 4 Kc. 1 Kc. dial calibration. Three stages double locked geared dial mechanism, 30 Kc. per turn tuning rate. Vackar oscillator employed in VFO for maximum stability.

  Price **$461.50**.

- **A111 9 Mc. SSB EXCITER**

  A fibre-glass printed circuit board, the finest German crystal filter, diode ring modulator, and solid state circuitry all contribute to make the A111 the finest SSB Exciter available. Specifications: Sideband suppression, 80 db.; carrier sup., 65 db.; audio freq. response, 350 to 3,000 cycles; mic. input, 1 mV. on 5K ohm load. Incorporates VOX amplifier and relay amplifier.

  Price with KVG **XF9B** Filter, **$120**.

- **A112 5 Mc. VFO**

  Frequency coverage: 4950 to 5550 Kc. Frequency stability better than 100 c/s. over 12 hours long term; better than 8 c/s. over 10 minutes if enclosed in suitable box. Output: 350 mV. on 220 ohm load.

  Price **$22**.

ALL ITEMS FREIGHT EXTRA

UNITED TRADE SALES PTY. LTD.

280 LONSDALE ST., MELBOURNE, VIC. (Opp. Myers) Phone 32-3815

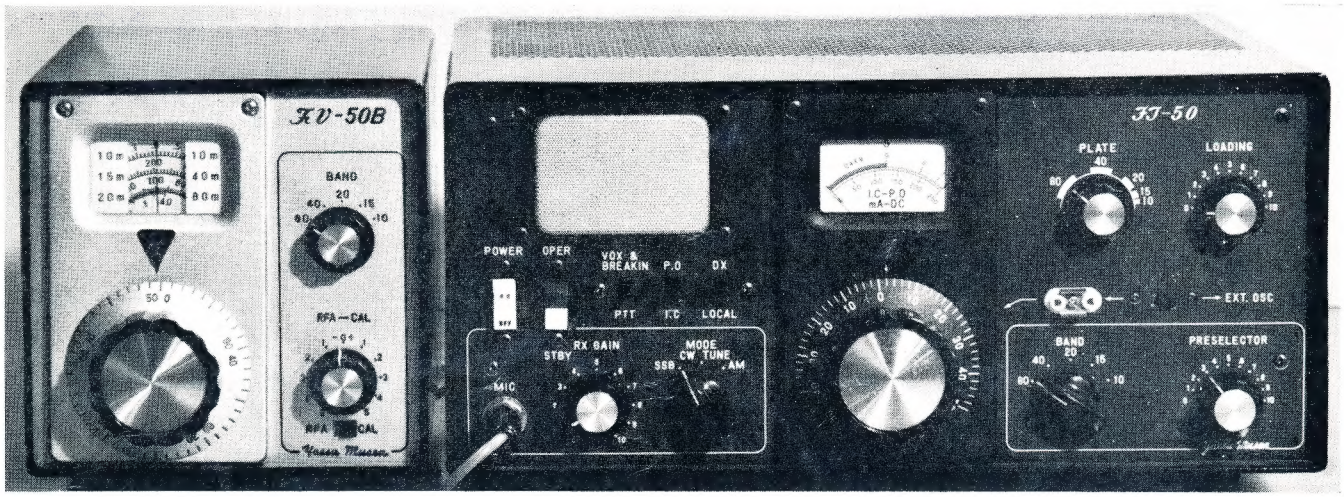

Yaesu FT-50 TRANSCEIVER

THE FT-50 IS A FIVE-BAND, 80-10M, SSB, CW, AM TRANSCEIVER, COMPLETE WITH BUILT-IN A.C. POWER SUPPLY AND PANEL-MOUNTED SPEAKER READY FOR DESK TOP OPERATION WHEN USED WITH EITHER HETERODYNE CRYSTALS IN THE VXO OR EXTERNAL VFO (FV-50B)

Basically a single conversion system utilising a five-crystal lattice filter (carrier crystal 5172.4 Kc.) with a 7360 balanced mixer, automatic sideband switching is accomplished, LSB on the 3.5 and 7 Mc. bands and USB on the 14, 21 and 28 Mc. bands. It follows that a minimum of spurious signals or image interference is produced. ALC minimises overdrive, helps develop extra "talk-power". Receiver incorporates prod. det. for SSB and CW, diodes for AM det. and AGC, high-gain 6BZ6 RF amp. Power supply full wave, solid state bridge rectifier, voltage regulated.

A panel switch enables selection of the built-in crystal heterodyning oscillator (VXO), tuned by varicap diodes; or the VFO (FV-50B) for full band coverage. The VFO includes the facility of "off-set" tuning, enabling a limited variation of receiver tuning, approximately ±5 Kc., without altering transmitting frequency, very useful for net operation, etc. Crystals, optional extra.

In addition to PTT control, a VOX system is built-in; standard keying or break-in for CW. On CW, carrier frequency is automatically changed to allow it to enter filter pass-band.

To adapt the FT-50 for 12v. DC supply, for mobile or portable use, the DC-50 control unit is available. This accessory, designed to be fitted under a car dash, includes a speaker, volume control, microphone input, power switch and frequency control for the VXO, so that the FT-50 may be remotely controlled.

A fully calibrated meter provides accurate reading of PA cathode current, relative RF output, and receiver "S" units.

Carrier insertion is adjustable, 0-maximum, for easy, safe tune-up. Balanced modulator is pre-set. No need to unbalance carrier for tuning. Transmitter PA tubes, a pair of 12BB14 high efficiency tetrodes. Includes antenna relay and robust SO-239 antenna socket.

VFO ranges: 3.5 Mc. band, 8,672.4 Kc. to 8.872.4 Kc.; 7 Mc. band, 12,172.4 Kc. to 12,322.4 Kc.; 14 Mc. band, 8,827.6 Kc. to 9,177.6 Kc.; 21 Mc. band, 15,827.6 Kc. to 16,277.6 Kc.; 28 Mc. band, 22,827.6 Kc. to 24,527.6 Kc.

GENERAL SPECIFICATIONS:

Frequency ranges: 3.5-4.0, 7.0-7.5, 14.0-14.35, 21.0-21.5, 28.0-29.2 Mc.
Power: 50 watts CW (SSB speech peak input 90-100 watt).
Carrier suppression: At least 40 db.
Sideband suppression: At least 40 db.
Spurious radiations: Down at least 40 db.
Antenna output impedance: 40 to 100 ohms unbalanced.
Sensitivity: SSB, CW, better than 0.5 uV. for 10 db. S plus N/N ratio; AM, better than 1 uV. for 10 db. S plus N/N ratio.
Selectivity: Plus or minus 2 Kc., —40 db.; plus or minus 1.2 Kc., —6 db.
Receiver spurious response: Image rejection more than 50 db; internal spurious signals within Amateur bands less than that from a 1 uV. antenna input.
Audio output: 1 watt.
Power source: AC—234v. 50 c/s., Transmit 0.7a., Receive 0.5a.; DC—12v., Transmit 10a., Receive 6a.

Size: Height 6 in., width 13 in., depth 10½ in.
Weight: 22 lbs.
Cabinet: Of sturdy construction, finished in satin black.
Front Panel, Controls, etc.: Power, Oper./Stby., VOX/Bk-In/PTT, PO/Ic (meter), DX/Local (RF Gain Selector), Mic. Socket, VFO/VXO select, AF Gain, Mode, Band, VXO, Preselector, Plate Tuning, Loading.
Rear: "S" Meter Zero, Bias, Carrier, VOX Sensitivity, Anti-Trip, Mic. Gain, Sockets for Key, VFO, Antenna, VFO power and remote. Fuse, earth. Switch and socket for External Speaker.
VFO: Transistorised FV-50B VFO employs easy to read gear driven dial with large heavy weight knob. Knob skirt, marked in 1 Kc. divisions (2 kc. on 10 mx) is adjustable for calibration. In matching cabinet, 6 x 6 x 8½ in. Wt. 7 lbs.

FT-50, complete with power cable, plugs, instruction book and circuits, and including FV-50B VFO, price only **$375.00,** incl. S.T. 90-day warranty, after sales service.

FOR OUTSTANDING PERFORMANCE WITH ECONOMY—CHOOSE YAESU

We stock Yaesu spares, including all valves; PTT microphones, SWR Meters, Hy-Gain Antennas, etc.

Australian Agents: **BAIL ELECTRONIC SERVICES**

60 Shannon St., Box Hill North, Vic., 3129. Phone 89-2213

N.S.W. enquirers contact:
A. J. ("SANDY") BRUCESMITH
47 Hyman St., Tamworth, N.S.W., 2340.
Phone (STD 067) 66-1010